Manual

CONFIGURATION

INSTALLATION

SETUP

COMMUNICATION

TECHNICAL DATA

Manual (ORIGINAL)

Modules with protection class IP20 and intrinsically-safe sensor/actuator connection (Ex i)

Zone 1/21

- **BEx1-PNIO 8AI 8AO 8DI 8DO** **Type: 14200100**
- **BEx1-PNIO 16DI 8DO 8DO(AIO)** **Type: 14200101**
- **BEx1-PNIO 32DI** **Type: 14200102**

Zone 2 /22

- **BEx2-PNIO 8AI 8AO 8DI 8DO** **Type: 24200100**
- **BEx2-PNIO 16DI 8DO 8DO(AIO)** **Type: 24200101**
- **BEx2-PNIO 32DI** **Type: 24200102**

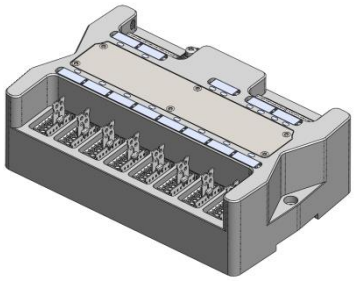

Zone 1/21

- **BEx1-Modbus 8AI 8AO 8DI 8DO** **Type: 14200300**
- **BEx1-Modbus 16DI 8DO 8DO(AIO)** **Type: 14200301**
- **BEx1-Modbus 32DI** **Type: 14200302**

Zone 2 /22

- **BEx2-Modbus 8AI 8AO 8DI 8DO** **Type: 24200300**
- **BEx2-Modbus 16DI 8DO 8DO(AIO)** **Type: 24200301**
- **BEx2-Modbus 32DI** **Type: 24200302**

Modules with protection class IP67 and intrinsically-safe sensor/actuator connection (Ex i)

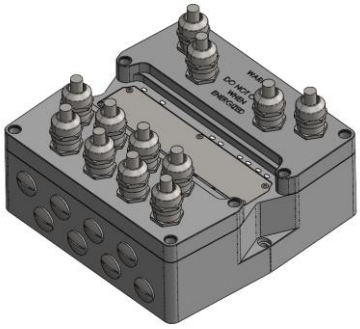

Zone 1/21

- **BEx1-PNIO 16DI 8DO 8DO(AIO)** **Type: 14310101**
- **BEx1-Modbus 16DI 8DO 8DO(AIO)** **Type: 14310301**

Contact/ Support
BEx-Solution GmbH
Lange Strasse 99
76199 Karlsruhe/Germany
T: +49 (0) 721 60 90 45 33
info@bex-solution.com
www.bex-solution.com

Link to Product

The original manual is written in German. All other available languages are translations of the original manual.
Note: The image picture on the title page is an example of the BEx1

Reservation: We reserve the right to make technical changes. Changes, errors or misprints do not constitute a claim for damages.

Content

1 Important Notes 7
1.1 Designated Use 7
1.2 Safety Instructions 7
1.3 Danger, Warning and Note Symbols 7
2 Configuration 8
2.1 Power Supply 8
2.2 Cable Cross Sections 8
2.3 Cable Selection 8
2.3.1 Power Supply 8
2.3.2 Ethernet 8
2.3.3 Sensors and Actuators 8
2.4 Electromagnetic Compatibility (EMC) 9
2.5 Grounding 9
2.6 Voltage Drops 9
3 Description 10
3.1 Function 10
4 Installation 11
4.1 Mounting 11
4.2 Dimension and Mounting 12
4.3 Connection 13
4.3.1 Power supply 14
4.3.2 Ethernet 14
4.3.3 Sensors and Actuators 15
4.4 Cover caps for IP20 module 16
5 LED Display 17
6 Setup 19
7 Diagnostic 19
8 Communication Protocols 20
8.1 Profinet 20
8.1.1 MRP - Media Redundancy Protocol 20
8.1.2 LLDP - Link Layer Discovery Protocol 20
8.2 Modbus TCP/IP 21
8.2.1 IO Register Modbus 22
8.2.2 Change the IP Address 23
9 IO Data Profinet 24

9.1 Input Byte 0...15 ⇨ Analog Input ... 25
9.2 Input Byte 16...19 ⇨ Digital Input ... 26
9.3 Input Byte 20…23 ⇨ Reserve ... 27
9.4 Input Byte 24…26 ⇨ Internal voltage ... 27
9.5 Input Byte 27, 28 ⇨ Internal temperature ... 28
9.6 Input Byte 29…31 ⇨ Operating hour counter ... 28
9.7 Input Byte 32...47 ⇨ Actual current flow through the pin ... 29
9.8 Input Byte 48 ⇨ Module diagnoses ... 30
9.9 Input Byte 49…52 ⇨ Open load ... 31
9.10 Input Byte 53…56 ⇨ Prefault ... 31
9.11 Input Byte 57…60 ⇨ Short circuit ... 32
9.12 Input Byte 61…63 ⇨ Serial number ... 32
9.13 Output Byte 0…15 ⇨ Analog Output at Pin 3 ... 33
9.14 Output Byte 16…19 ⇨ Channel ON / OFF ... 34
9.15 Output Byte 21 ⇨ SwitchMode ... 35
9.16 Output Byte 22 ⇨ AO to DO (Type *00) ... 36
9.17 Output Byte 23 ⇨ DO to AO (Type *01) ... 37
9.18 Output Byte 24 ⇨ DO to AI (Type *01) ... 38
9.19 Output Byte 20, 25…63 ⇨ Reserve ... 39
10 Temperature deratings ... 40
10.1 Power Dissipation ... 41
11 Technical Data ... 42
12 Approval safety data ... 47
13 Explosion Protection ... 48
13.1 Specific Conditions of use for BEx1 ... 48
13.2 Specific Conditions of use for BEx2 ... 48
14 Service, Maintenance ... 49
15 Repair ... 49
16 Disposal ... 49
17 Transport and Storage ... 49
18 Accessories / Spare parts ... 50
19 Troubleshooting ... 51
EU Declaration of Conformity ... 52
List of Abbreviations ... 55
Annex 1 - Byte allocation of the different modules ... 56
Annex 2 - How to start data exchange with PLC ... 57

Annex 3 Connection examples Type *00 64
Annex 4 Connection examples Type *01 70
Annex 5 Connection examples Type *02 74

1 Important Notes

1.1 Designated Use

BEx1 module can be installed in hazardous areas of Zone 1/21 and the BEx2 module can be installed in hazardous areas of Zone 2/22.

- For special conditions see chapter 13.

Read this manual carefully before starting the equipment and keep it in a place that is accessible at any time for all users. The products described in this manual were developed, manufactured, tested, and documented under strict compliance with safety standards. The equipment poses no danger to operating personnel or material if the handling instructions are complied with. The EU Declaration of Conformity contains the requirements and guidelines that the module fulfills. Trouble-free and safe functioning of the product can only be assured through proper transportation, storage, installation, assembly, and operation with proper care and attention.

1.2 Safety Instructions

BEx module may only be operated in a clean, undamaged condition and may only be deployed within the specified temperature class and the temperature range indicated for it (see type label). **The assembly/dismantling of the regulating and control components must be conducted by qualified personnel authorised and trained to install electrical components in potentially explosive areas.** The use in areas other than those specified or alteration of the product releases BEx-Solution from liability for defects and further liability. Modifications and changes to the module are not permitted. The generally applicable statutory regulations and other binding guidelines on occupational health and safety, on accident prevention and on environmental protection must be complied with.

1.3 Danger, Warning and Note Symbols

This manual contains important information that has to be observed in order to guarantee safety and avoid material damage. This information is specially marked and illustrated as follows:

CAUTION

The hazard warning symbol refers to instructions that if not observed, may cause damage to equipment and other objects or, if appropriate precautions are not taken, may result in danger to the user's health or life.

REMARK

This symbol refers to important technical information

RECOMMENDATION

Notes with this symbol are recommendations of BEx-Solution GmbH

2 Configuration

2.1 Power Supply

The electrically operating of the module need 24V (DC 18…30V) direct current voltage. The power supply (SELV/PELV) is connected to the module via Ex e input terminal X9.

Two independent voltages can be connected (sensor and actuator voltage are separated, with common ground). Therefore it´s possible to shut down both in separate

It must be ensured that the supply voltage - measured at the farthest module does not fall under 18 V DC. If it does, the module switches off.

2.2 Cable Cross Sections

All terminals on the module are cage clamp terminals (CAGE CLAMP®). The max. cable cross-section at X9 (supply) and X10 (bus) is 2.5 mm² and for X1-X8 (sensors and actuators) 1.5 mm².

2.3 Cable Selection

2.3.1 Power Supply

Regarding voltage drop the max cable length and cable cross-section must be taken for the power supply cable. A core-cable for fixed installation (max 2.5 mm²) is required.

2.3.2 Ethernet

The maximum segment length for electrical data transmission with copper lines between two nodes (field devices or switches) is 100 m. The copper cables should be made uniform in AWG 22. The cable type A should be used. Standard fixed, no movement after installation.

2.3.3 Sensors and Actuators

Due to intrinsic safety, connecting cables should have the color light blue. A two core-cable for fixed installation (max 1.5 mm²) is required. Shielded cable should be used for the analog signals.

2.4 Electromagnetic Compatibility (EMC)

Modules confirm to the complete requirements and guidelines of the EU/UK Declaration of Conformity

The modules fulfill the relevant standard of electromagnetic compatibility on its own. There is no guarantee if its installed with other equipment in a plant or machine.
For this reason, we urgently advise you to comply with the instructions on installation in accordance with EMC requirements below. Only then can you assume that the overall system complies with EMC requirements, provided CE-marked components are used exclusively.

The device is Class A equipment. It may cause radio-frequency interferences in residential areas. In this case, the operator may be required to implement adequate countermeasures.

2.5 Grounding

The earth connection at the module must be always connected to the necessary equipotential bonding conductor. Required cable cross-section must be minimum 4mm².

2.6 Voltage Drops

Short-term voltage drops normally do not pose operational problems as the electronics are protected by capacitors integrated in the power circuits. This does not apply to the power supply of the sensors and actuators connected to the module. Their high-power requirement cannot be covered by the capacitors integrated in the device. For this reason, even transient interruptions of the actuator supply can result in undesirable switching operations. Longer interruptions of the sensor supply may cause changes of the input signal.

3 Description

The BEx module is a Remote IO system that is installed as an interface in zone 1/21 or 2/22 in the hazardous area between the intrinsically safe signals from zone 0/20 (sensors/actuators) and the external PLC in the safe area. The system is used to transmit input-output signals via bus system. With BEx module its possible to connect up to 32 intrinsically safe signals via short cable routes directly to the integrated input/output (IO) module. All signals are combined in the BEx module and digitized via the integrated bus coupler. The data transfer takes place via a four-wire bus cable to the controller.

Isolating amplifier as well as analog and digital IO modules are no longer necessary.

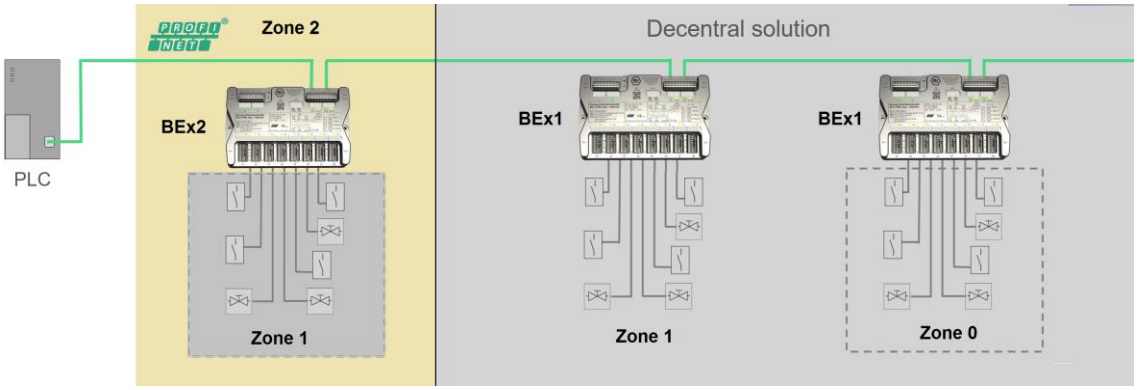

Figure 1 Simplified display: System and installation with BEx Remote IO module

3.1 Function

The module has 32 intrinsically safe channels. Possible variations are:

8xDI / 8xDO / 8xAI / 8xAO 8xDI / 16xDO / 8xAI 8xDI / 8xDO / 8xSwitch Mode Zone 1 Type : **14200*00 (IP20)** Zone 2 Type : **24200*00 (IP20)**	16DI / 16DO 16DI / 8DO / 8AIO 16xDI / 8xDO/ 8xSwitch Mode Zone 1 Type : **14200*01 (IP20)** Zone 2 Type : **24200*01 (IP20)** Zone 1 Type : **14310*01 (IP67)**	32DI Zone 1 Type : **14200*02 (IP20)** Zone 2 Type : **24200*02 (IP20)**

4 Installation

Danger of explosion
Improperly wired cables/wires can lead to dangerous mix-ups between intrinsically safe and non-intrinsically safe circuits, which can ignite an explosive mixture. Observe the installation instructions acc. IEC/EN 60079-14

4.1 Mounting

BEx1 IP 20 module is designed for use in Zone 1/21 and Zone 2/22 hazardous areas and is intended for connection to a fixed installation in certified enclosures/control-stations that conform to equipment protection level Gb or Db. Enclosure type min. IP 54.

The BEx2 module must be installed in a suitable housing according the EN 60079-7:2018 in such a way, that a degree of protection of at least IP 54 is reached.

BEx1 IP 67 module is designed for use in Zone 1/21 and Zone 2/22 hazardous areas and is intended for connection. A second and separate housing in no necessary.

For special conditions see chapter 13.

Danger of explosion
By incorrect installation, there is a risk of explosion.

BEx modules can be mounted side by side. The installation position is variable

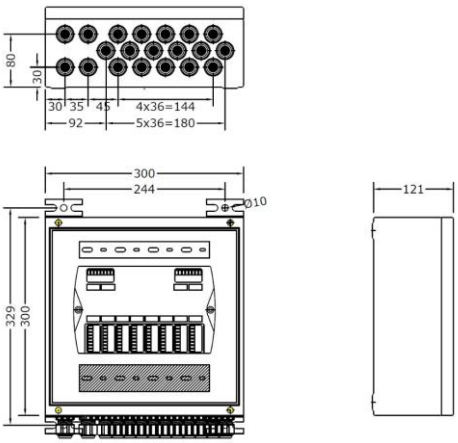

Figure 2 Example certified Ex e enclosure made of stainless steel with cable glands and shield rail

RECOMMENDATION: We offer individual certified control stations from our system partner.

4.2 Dimension and Mounting

Typ: 14200*00 / 14200*01 / 14200*02

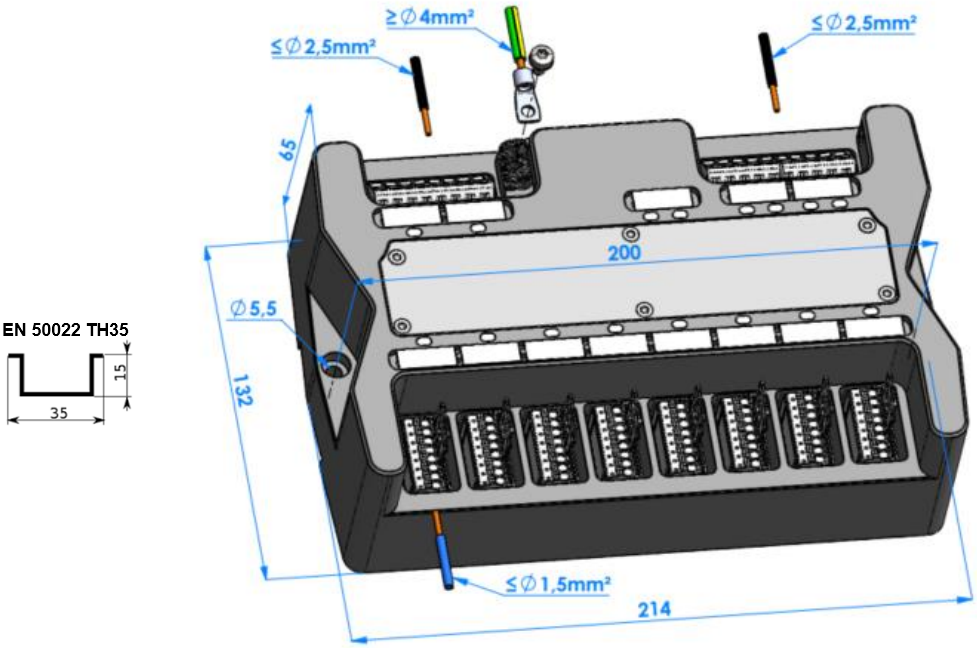

Typ: 14310*01

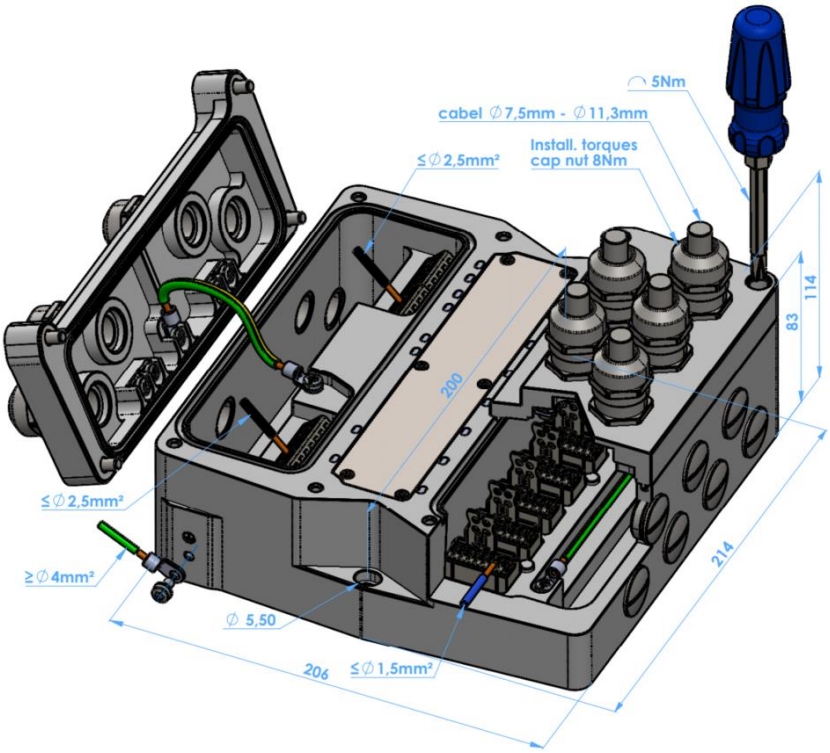

Figure 3 Dimension and mounting BEx IP20 and IP67 Module

4.3 Connection

All terminals are in spring clamp type (CAGE CLAMP®).

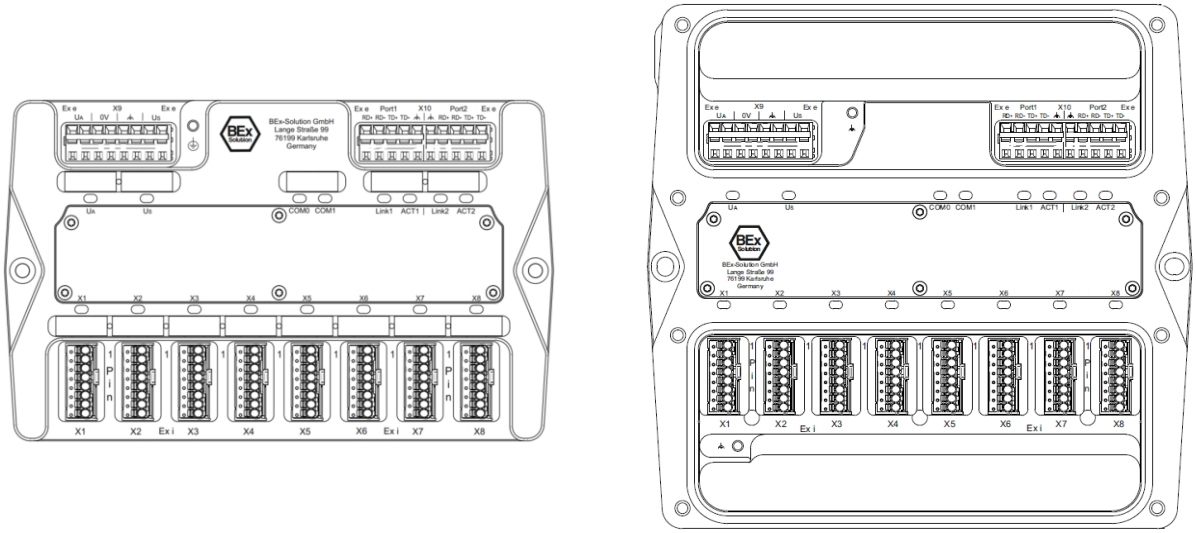

Figure 4 Front view BEx IP20 und IP67

⏚	**Ground connection / equipotential bonding** via M4 screw and eyelet
X9	**Power supply of actuators, sensors and module** Ex e terminals (increased safety)
X10	**Ethernet** Ex e terminals (increased safety)
X1-X8	**Intrinsically safe sensors and actuators** Ex i terminals pluggable (intrinsically safe)

4.3.1 Power supply

Power supply of actuators, sensors and module (Ex e terminals)

Marking terminals:
UA = Power supply of actuators
0V = Ground
⏚ = Functional grounding
US = Power supply sensors and module

Separate power supply for sensor and actuator.

The power supply US must not be switchable. It supplies the module electronics.

The input voltages US and UA are internally protected against reverse polarity.

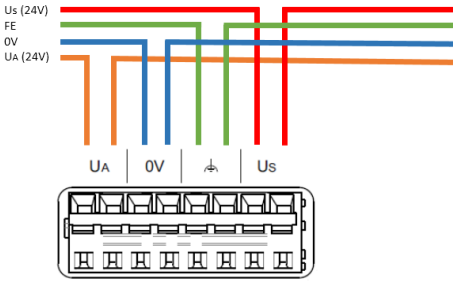

Figure 5 Terminal X9

4.3.2 Ethernet

Ethernet-based fieldbus connection. (Ex e terminals) The integrated switch allows the connection of further bus participants.

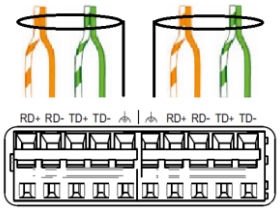

Figure 6 Terminal X10

RD+	Receive data positive line
RD-	Receive data negative line
TD+	Transmit data positive line
TD-	Transmit data negative line
⏚	Shield

In the safe area no isolating amplifier for the Ethernet connection is required!

Autonegotiation for Ethernet (Layer 1 - OSI-Model) conform with IEEE 802.3u

Auto-crossover conform with IEEE 803.2ab

4.3.3 Sensors and Actuators

Connection of intrinsically safe sensors and actuators (Ex i terminals)

Marking terminals:

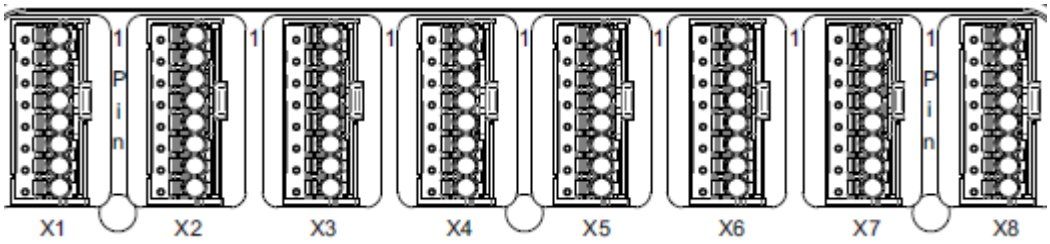

Figure 7 Terminal X1-X8

	8xDI / 8xDO / 8xAI / 8xAO 8xDI / 16xDO / 8xAI 8xDI / 8xDO / 8xSwitch Mode Zone 1 Type : **14200*00 (IP20)** Zone 2 Type : **24200*00 (IP20)**	16DI / 16DO 16DI / 8DO / 8AIO 16xDI / 8xDO/ 8xSwitch Mode Zone 1 Type : **14200*01 (IP20)** Zone 2 Type : **24200*01 (IP20)** Zone 1 Type : **14310*01 (IP67)**	32DI Zone 1 Type : **14200*02 (IP20)** Zone 2 Type : **24200*02 (IP20)**
1	AI / Switch Mode(-)	DO / AO / AI / Switch Mode(+)	*DI*
2	GND	GND / Switch Mode(-)	GND
3	AO / DO / Switch Mode(+)	*DI*	*DI*
4	GND	GND	GND
5	*DI*	*DI*	*DI*
6	GND	GND	GND
7	DO	DO	*DI*
8	GND	GND	GND

Figure 8 Terminal X1-X8

The intrinsically safe Namur-Sensors may only be connected to the function. Connection to other pins can destroy the sensor!

Type *00 Pin 1 passive (only Ex i sources at the modul can be used)
See Annex 3 Connection examples Type *00

Type *01 Pin 1 active current source

4.4 Cover caps for IP20 module

With the use of the additional cover caps (accessory) the Ex e enclosure can be opened while energized. But take note that no other Ex e connection should be open in the enclosure.

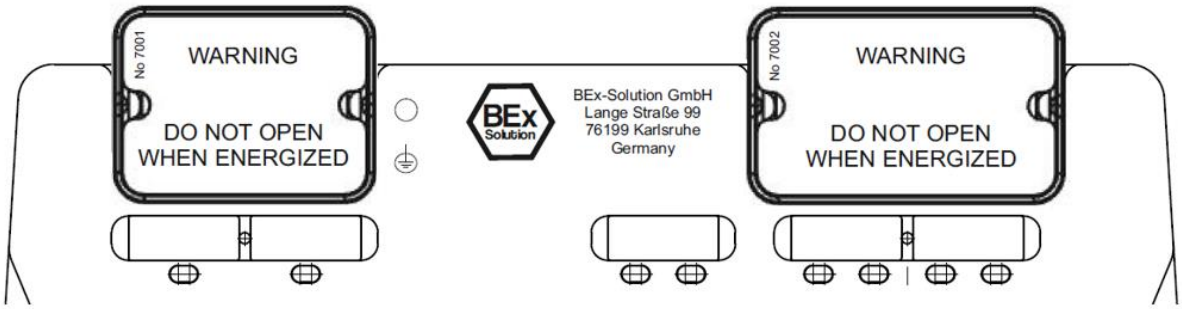

Figure 9 Cover caps IP20

Tightening torque of cover cap screws: 1 Nm

Please note the EN or rather the IEC 60079-7 paragraph 4.10.3

5 LED Display

The module is equipped with different LEDs.

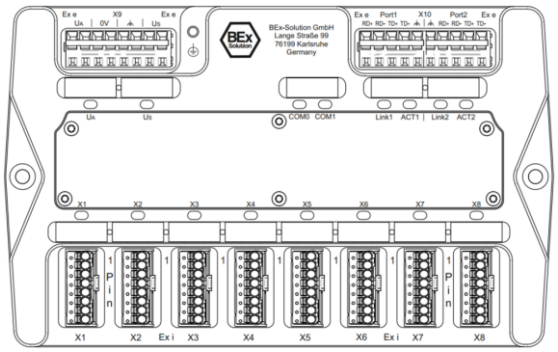

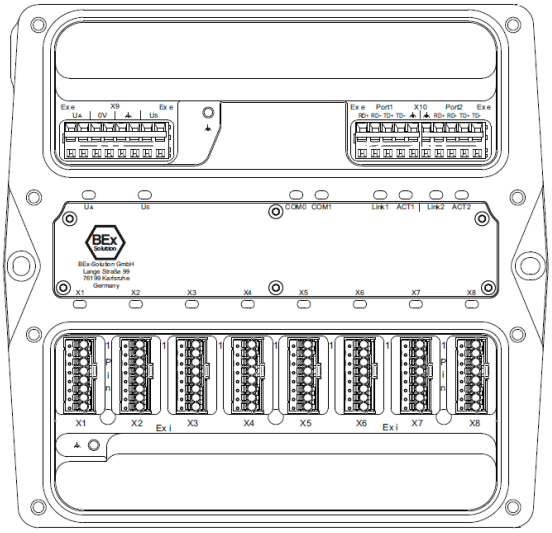

Figure 10 Front view BEx IP20 and IP67

LED	Function	Color
UA	Display of actuator power supply	Green / Red
UA	Display of sensor and module power supply	Green / Red
COM0	Communication LED - 0	Green / Red
COM1	Communication LED - 1	Green / Red
Link1	Ethernet connection LED Port 1	Green
ACT1	Ethernet activity LED Port 1	Yellow
Link2	Ethernet connection LED Port 2	Green
ACT2	Ethernet activity LED Port 2	Yellow
X1-X8	Status display of the associated terminals	Green / Yellow

				Default
UA / US	LED off	No voltage on module		
	LED red	Voltage too low < 18V		
	LED green	Voltage ok U > 18V		←
COM0 / COM1	LED off	Module works property		←
	COM0 LED red	System error		
	COM1 LED red	Bus error		
Link / ACT Each for Port 1 and Port 2	Link / ACT LED off	No connection and no communication		
	Link LED on ACT LED off	Connection exists but no communication		
	Link LED on ACT LED flash	Connection exists Communication in start up	blitzt	
	Link LED on ACT LED blink ca. 0.5 Hz	Connection exist and communication in operation	blinkt	←
X1 to X8	LED off	Output is off and there is no error at the respective terminal		
	LED yellow	Output (pin 7) is switched and there is no error at the respective terminal		
	LED red	There is an error at the respective terminal, regardless of the output		

6 Setup

There is no configuration necessary to commission the BEx module.

Danger of explosion!
Prior to commissioning proper installation must be ensured. See also chapter 1 IMPORTANT NOTES and chapter 4 INSTALLATION!

7 Diagnostic

Open load detection for each channel

Prefault detection for each channel

Short circuit detection for each channel

The corresponding LED-display X1-X8 on the module takes place

The individual messages are available in the communication data

8 Communication Protocols

Autonegotiation for Ethernet (Layer 1 - OSI-Model) conform with IEEE 802.3u

Auto-crossover conform with IEEE 803.2ab

8.1 Profinet

For operating of Profinet module described in this manual a GSDML-file is required.

GSDML-File *.xml English

The GSDML file can be downloaded from the website of BEx-Solution:

www.bex-solution.com/downloads

8.1.1 MRP - Media Redundancy Protocol

Please read the complete documentation from Siemens about MRP, here only a small section for the Remote IO module is described, these settings have to be made for every module individually.

The reconfiguration time for MRP is 200ms (for 50 nodes), so the response monitoring time > 200ms must be selected for PROFINET communication. The response monitoring time is not configured directly but as a number of accepted update cycles without IO data. Select IO cycle “can be set”; and enter the desired time. The response monitoring time must be greater than 200ms in total. To achieve this, you can either increase the update time or the number of cycles without PNIO Traffic.

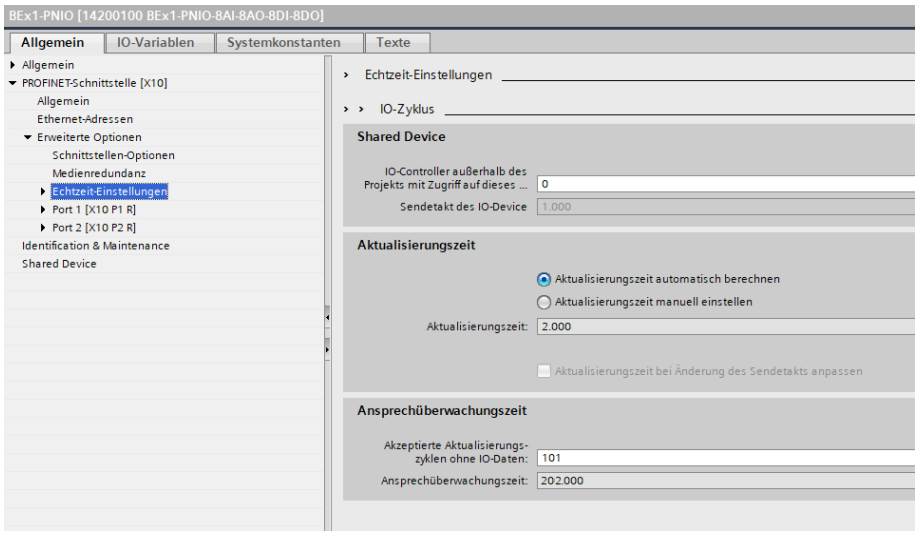

8.1.2 LLDP - Link Layer Discovery Protocol

To use the automatic addressing function (LLDP - conform with IEEE standard 802. 1AB) it is necessary to ensure that:

- The topology recognition in the PLC must turn on.
- If there is a switch in the plant, a managed switch must be used.

8.2 Modbus TCP/IP

The module has 32 registers (module ➔ PLC) and 35 registers (PLC ➔ module).

Registers 1-32 correspond to the 64 byte input/output data (see chapter 9)

For a Modbus client whose register numbering begins at 0, the register numbers specified in this manual must be decremented by 1.

Registers 33 to 35 are for addressing the module.

The NetMask value are fix 255.255.255.0

Supported MODBUS function codes

Function Code	Register Type
FC2	Read Discrete Input
FC4	Read Input Registers
FC5	Write Single Coil
FC6	Write Single Holding Register
FC15	Write Multiple Coils
FC16	Write Multiple Holding Registers

8.2.1 IO Register Modbus

32 Register (Modul ➔ SPS)

Register 1		Register 2		Register 3		Register 4		Register 5		Register 6		Register 7		Register 8	
High	Low	High	Low	High	Low	High	Low	High	Low	High	Low	High	Low	High	Low
AI X1 Pin1		AI X2 Pin1		AI X3 Pin1		AI X4 Pin1		AI X5 Pin1		AI X6 Pin1		AI X7 Pin1		AI X8 Pin1	

Register 9		Register 10		Register 11		Register 12		Register 13			Register 14		Register 15		Register 16	
High	Low	High	Low	High	Low	High	Low	High	Low		High	Low	High	Low	High	Low
DI X1-X8 Pin1	DI X1-X8 Pin3	DI X1-X8 Pin5	DI X1-X8 Pin7	Res	Res	Res	Res	Internal voltage			Internal temperature		Operating hour counter			
								U_S	U_A	8V2	sign	value				

Register 17		Register 18		Register 19		Register 20		Register 21		Register 22		Register 23		Register 24	
High	Low	High	Low	High	Low	High	Low	High	Low	High	Low	High	Low	High	Low
Current flow								Current flow							
X1 Pin5	X2 Pin5	X3 Pin5	X4 Pin5	X5 Pin5	X6 Pin5	X7 Pin5	X8 Pin5	X1 Pin7	X2 Pin7	X3 Pin7	X4 Pin7	X5 Pin7	X6 Pin7	X7 Pin7	X8 Pin7

Register 25		Register 26		Register 27		Register 28		Register 29		Register 30		Register 31		Register 32	
High	Low	High	Low	High	Low	High	Low	High	Low	High	Low	High	Low	High	Low
Modul Diag	Open load				Prefault				Short circuit				High Low Serial number		
	X1-X8 Pin1	X1-X8 Pin3	X1-X8 Pin5	X1-X8 Pin7	X1-X8 Pin1	X1-X8 Pin3	X1-X8 Pin5	X1-X8 Pin7	X1-X8 Pin1	X1-X8 Pin3	X1-X8 Pin5	X1-X8 Pin7			

32 Register (SPS ➔ Modul)

Register 1		Register 2		Register 3		Register 4		Register 5		Register 6		Register 7		Register 8	
High	Low	High	Low	High	Low	High	Low	High	Low	High	Low	High	Low	High	Low
High AO X1 Low		AO X2		AO X3		AO X4		AO X5		AO X6		AO X7		AO X8	

Register 9		Register 10		Register 11		Register 12		Register 13		Register 14		Register 15		Register 16	
High	Low	High	Low	High	Low	High	Low	High	Low	High	Low	High	Low	High	Low
ON/OFF X1-X8 Pin 1	ON/OFF X1-X8 Pin 3	ON/OFF X1-X8 Pin 5	ON/OFF X1-X8 Pin 7	Res	Switch mode X1-X8	AO->DO X1-X8 **Type *00** Pin 3	DO->AO X1-X8 **Type *01** Pin 1 **Type *04** Pin 3	DO->AI X1-X8 **Type *01** Pin 1	DO->DI X1-X8 **Type *04** Pin 3	DO->DI X1-X8 **Type *04** Pin 5	Res	Res	Res	Res	Res

Register 17		Register 18		Register 19		Register 20		Register 21		Register 22		Register 23		Register 24	
High	Low	High	Low	High	Low	High	Low	High	Low	High	Low	High	Low	High	Low
Res	Res	Res	Res	Res	Res	Res	Res	Res	Res	Res	Res	Res	Res	Res	Res

Register 25		Register 26		Register 27		Register 28		Register 29		Register 30		Register 31		Register 32	
High	Low	High	Low	High	Low	High	Low	High	Low	High	Low	High	Low	High	Low
Res	Res	Res	Res	Res	Res	Res	Res	Res	Res	Res	Res	Res	Res	Res	Res

All „Res“ Bytes have to be „0“. The channels can be switched on via bytes 16 to byte 19!

8.2.2 Change the IP Address

Register 33 : IP-Address_Byte1 and IP-Address_Byte0
Register 34 : IP-Address_Byte3 and IP-Address_Byte2
Register 35 : Flag for writing or DHCP

IP-Byte1	IP-Byte0	IP-Byte3	IP-Byte2	Flag (Write or DHCP)
Register 33 IP Address		Register 34 IP Address		Register 35 Flag

Writing 0xFEEF to the register „Flag“, the values in register 33 and 34 will be stored in the module.

Writing 0xA55A to the register "Flag", will delete the stored IP Address and activate DHCP.

After storing the IP-Address the module does a reset.

Example for IP Address: 192.168.1.68

IP-Byte1 1	IP-Byte0 68	IP-Byte3 192	IP-Byte2 168	Write 0xFEEF
Register 33 IP Address (z.B. 0x0144)		Register 34 IP Address (z.B. 0xC0A8)		Register 35 Flag

Register 33 : 0x0144 -> (IP_B0 : 68 = hex 44 ; IPB1 : 1 = hex 01)
Register 34 : 0xC0A8 -> (IP_B2 : 168 = hex A8 ; IPB3 : 192 = hex C0)
Register 35 : 0xFEEF (write)

9 IO Data Profinet

64 Input byte – (Modul ➔ SPS)

0	1	2	3	4	5	6	7	8	9	10	11	12	13	14	15
High AI X1 Pin1	Low	AI X2 Pin1		AI X3 Pin1		AI X4 Pin1		AI X5 Pin1		AI X6 Pin1		AI X7 Pin1		AI X8 Pin1	

16	17	18	19	20	21	22	23	24	25	26	27	28	29	30	31
DI X1-X8 Pin1	DI X1-X8 Pin3	DI X1-X8 Pin5	DI X1-X8 Pin7	Res	Res	Res	Res	Internal voltage			Internal temperature		High Operating hour counter		Low
								U_S	U_A	8V2	sign	value			

32	33	34	35	36	37	38	39	40	41	42	43	44	45	46	47
Current flow								Current flow							
X1 Pin5	X2 Pin5	X3 Pin5	X4 Pin5	X5 Pin5	X6 Pin5	X7 Pin5	X8 Pin5	X1 Pin7	X2 Pin7	X3 Pin7	X4 Pin7	X5 Pin7	X6 Pin7	X7 Pin7	X8 Pin7

48	49	50	51	52	53	54	55	56	57	58	59	60	61	62	63
Modul Diag	Open load				Prefault				Short circuit				High Serial number		Low
	X1-X8 Pin1	X1-X8 Pin3	X1-X8 Pin5	X1-X8 Pin7	X1-X8 Pin1	X1-X8 Pin3	X1-X8 Pin5	X1-X8 Pin7	X1-X8 Pin1	X1-X8 Pin3	X1-X8 Pin5	X1-X8 Pin7			

64Output byte – (SPS ➔ Modul)

0	1	2	3	4	5	6	7	8	9	10	11	12	13	14	15
High AO X1	Low	AO X2		AO X3		AO X4		AO X5		AO X6		AO X7		AO X8	

16	17	18	19	20	21	22	23	24	25	26	27	28	29	30	31
ON/OFF X1-X8 Pin 1	ON/OFF X1-X8 Pin 3	ON/OFF X1-X8 Pin 5	ON/OFF X1-X8 Pin 7	Res	Switch mode X1-X8	AO->DO X1-X8 **Type *00** Pin 3	DO->AO X1-X8 **Type *01** Pin 1 **Type *04** Pin 3	DO->AI X1-X8 **Type *01** Pin 1	DO->DI X1-X8 **Type *04** Pin 3	DO->DI X1-X8 **Type *04** Pin 5	Res	Res	Res	Res	Res

32	33	34	35	36	37	38	39	40	41	42	43	44	45	46	47
Res	Res	Res	Res	Res	Res	Res	Res	Res	Res	Res	Res	Res	Res	Res	Res

48	49	50	51	52	53	54	55	56	57	58	59	60	61	62	63
Res	Res	Res	Res	Res	Res	Res	Res	Res	Res	Res	Res	Res	Res	Res	Res

All „Res“ Bytes have to be „0“. The channels can be switched on via bytes 16 to byte 19!

Explanation:

AI = Analog Input

AO = Analog Output

DI = Digital Input

DO = Digital Output

Res = Reserved (do not use)

Diag = Diagnoses

9.1 Input Byte 0...15 ⇨ Analog Input

Value :1000 = analog Value in mA (z.B. 9987 : 1000 = 9,987mA)

0	1	2	3	4	5	6	7	8	9	10	11	12	13	14	15
High AI Low X1-Pin1		AI X2-Pin1		AI X3-Pin1		AI X4-Pin1		AI X5-Pin1		AI X6-Pin1		AI X7-Pin1		AI X8-Pin1	
MSB							LSB	MSB							LSB
15	14	13	12	11	10	9	8	7	6	5	4	3	2	1	0
2^{15}	2^{14}	2^{13}	2^{12}	2^{11}	2^{10}	2^{9}	2^{8}	2^{7}	2^{6}	2^{5}	2^{4}	2^{3}	2^{2}	2^{1}	2^{0}
Byte 0								Byte 1							

For example:

Value[mA]	hex			dex	
4,000	0F	A0		15	160
10,000	27	10		39	16
15,000	3A	98		58	152
20,000	4E	20		78	32
25,000	61	A8		97	168
	Byte 0	Byte 1		Byte 0	Byte 1

9.2 Input Byte 16...19 ⇨ Digital Input

Input Byte 16 ⇨ X1…X8 - Pin 1
Input Byte 17 ⇨ X1…X8 - Pin 3
Input Byte 18 ⇨ X1…X8 - Pin 5
Input Byte 19 ⇨ X1…X8 - Pin 7

Input Byte (0 = off ; 1 = on)

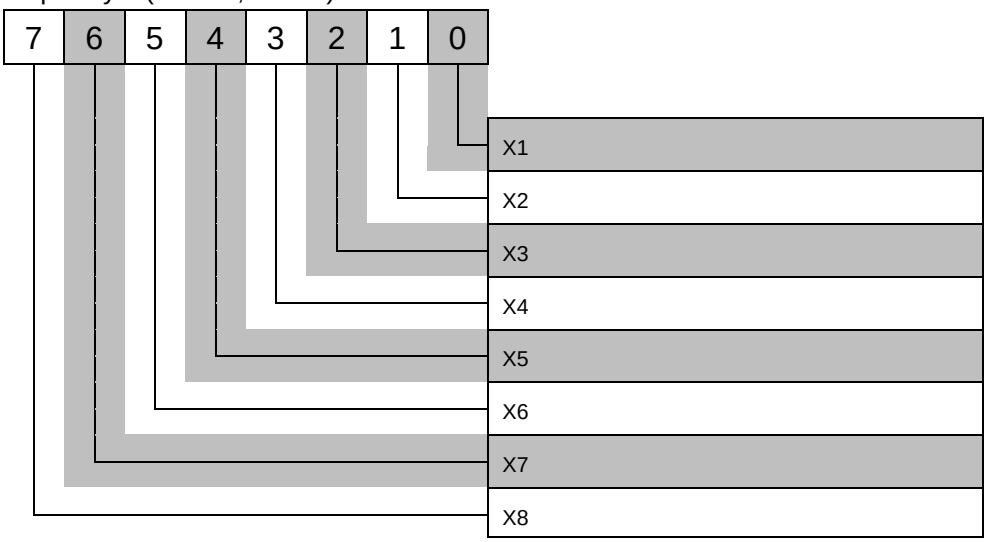

For Namur sensors

Type *00	Type *01
„1“ if current is < 1,2 mA	„0“ if current is < 1,2 mA
„0“ if current is > 2,1 mA	„1“ if current is > 2,1 mA

Current < 0,2 mA	⇒ Open load
Current < 1,2 mA	⇒ Sensor ready, damped
Current > 2,1 mA	⇒ Sensor ready, undamped
Current from max. value	⇒ Short circuit, max. current

9.3 Input Byte 20…23 ⇨ Reserve

Do not use

9.4 Input Byte 24…26 ⇨ Internal voltage

Input Byte 24 ⇨ U_S	Internal Sensor supply voltage
Input Byte 25 ⇨ U_A	Internal Actuator supply voltage
Input Byte 26 ⇨ 8V2	Internal Namur supply voltage

Value :10 = Voltage value in V

e.g. 243 : 10 = 24,3V

e.g. 82 : 10 = 8,2V

The voltage is measured with a tolerance of ± 10%.

9.5 Input Byte 27, 28 ⇨ Internal temperature

Input Byte 27 ⇨ Sign of temperature

Input Byte 28 ⇨ Temperature value

Byte 27 = Sign of temperature value in Byte 28

(0 = positive temperature value; 1 = negative temperature value)

Byte 28 = Temperature value in °C (e.g. 24 = 24°C)

if Byte 27 = 1 then e.g. -24°C

The temperature is measured with a tolerance of ± 5K.

If the temperature rises internally above 75 ° C (or < 45 ° C) there will be an outcoming error message on byte 48.

9.6 Input Byte 29…31 ⇨ Operating hour counter

Input Byte 29 ⇨ High value
Input Byte 30 ⇨ Mid value
Input Byte 31 ⇨ Low value

Value = operating hour in h

e.g. 7488 : 24 = 312 days

9.7 Input Byte 32...47 ⇨ Actual current flow through the pin

Input Byte 32 ⇨ X1 – Pin5

Input Byte 33 ⇨ X2 – Pin5

Input Byte 34 ⇨ X3 – Pin5

Input Byte 35 ⇨ X4 – Pin5

Input Byte 36 ⇨ X5 – Pin5

Input Byte 37 ⇨ X6 – Pin5

Input Byte 38 ⇨ X7 – Pin5

Input Byte 39 ⇨ X8 – Pin5

Input Byte 40 ⇨ X1 – Pin7

Input Byte 41 ⇨ X2 – Pin7

Input Byte 42 ⇨ X3 – Pin7

Input Byte 43 ⇨ X4 – Pin7

Input Byte 44 ⇨ X5 – Pin7

Input Byte 45 ⇨ X6 – Pin7

Input Byte 46 ⇨ X7 – Pin7

Input Byte 47 ⇨ X8 – Pin7

Value :10 = current in mA

e.g. 193 : 10 = 19,3mA

max. current 255:10 = 25,5mA

The current is measured with a tolerance of ± 1mA

9.8 Input Byte 48 ⇨ Module diagnoses

Input Byte 48 ⇨ Any module diagnoses appear in this byte

Modul Diagnose (0 = OK ; 1 = Fault)

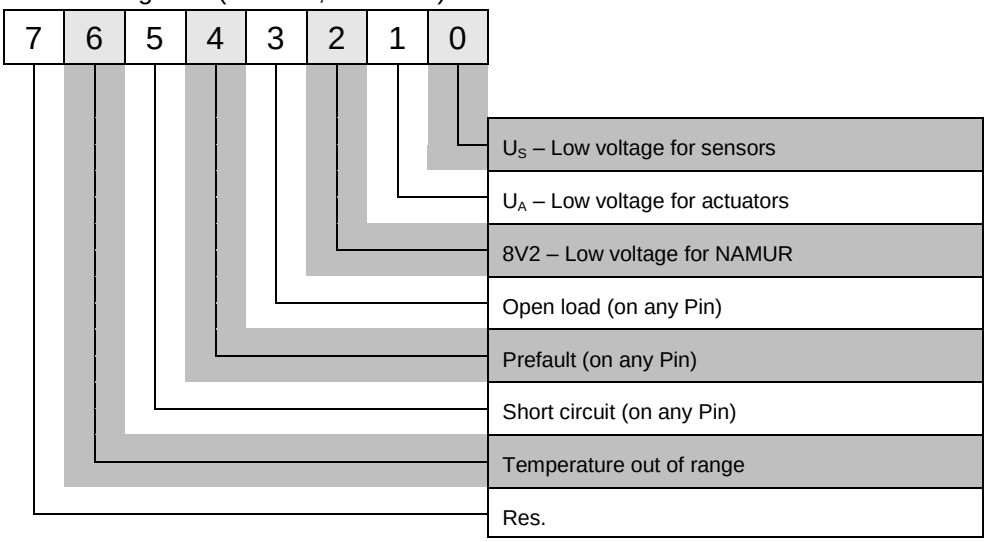

RECOMMENDATION:
All errors are displayed in this byte and should be evaluated in the PLC.

9.9 Input Byte 49…52 ⇨ Open load

Input Byte 49 ⇨ Open load Pin 1
Input Byte 50 ⇨ Open load Pin 3
Input Byte 51 ⇨ Open load Pin 5
Input Byte 52 ⇨ Open load Pin 7

Open load Byte 49 (0 = OK ; 1 = Fault)

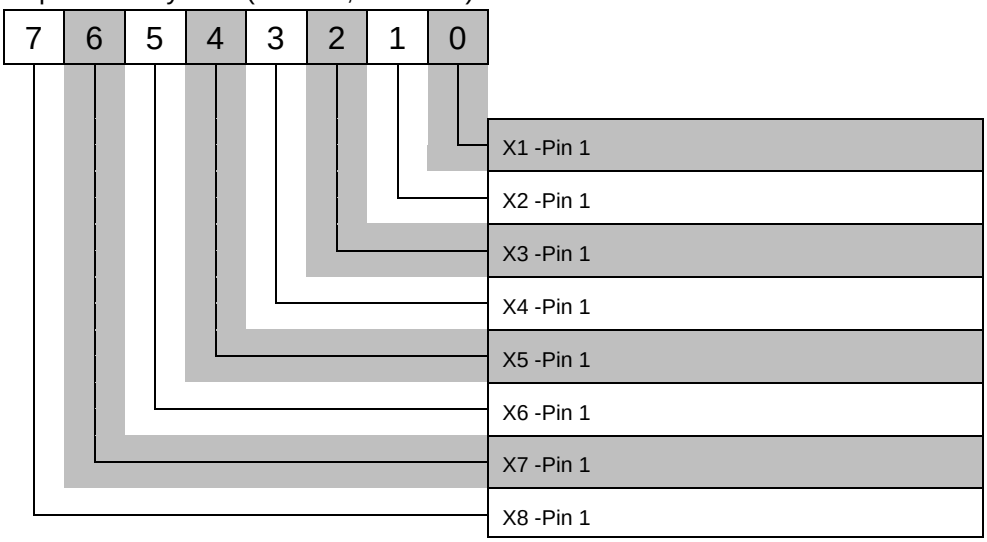

Open load is detected at a current < 0.5mA

9.10 Input Byte 53…56 ⇨ Prefault

Input Byte 53 ⇨ Prefault Pin 1
Input Byte 54 ⇨ Prefault Pin 3
Input Byte 55 ⇨ Prefault Pin 5
Input Byte 56 ⇨ Prefault Pin 7

Prefault Byte 53 (0 = OK ; 1 = Fault)

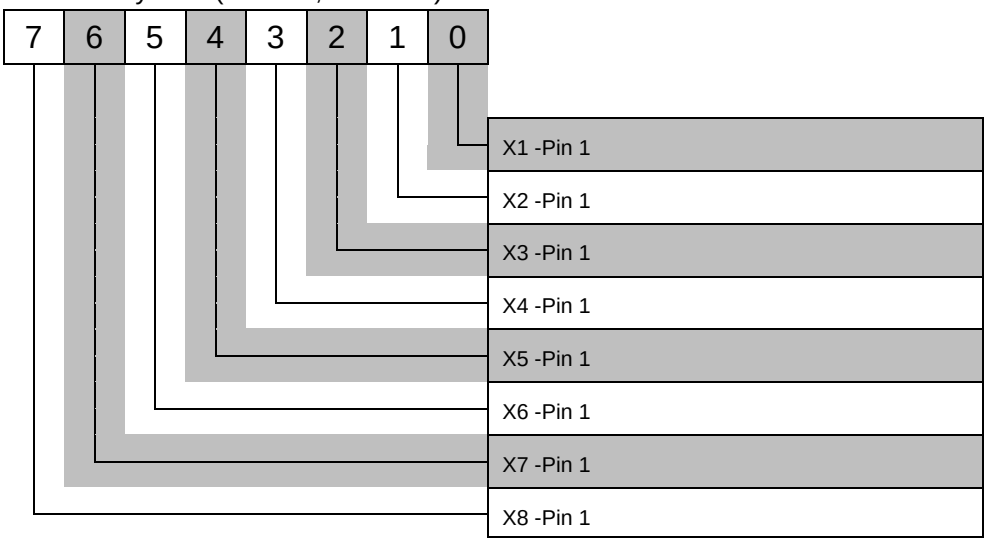

9.11 Input Byte 57…60 ⇨ Short circuit

Input byte 57 ⇨ Short circuit Pin 1
Input byte 58 ⇨ Short circuit Pin 3
Input byte 59 ⇨ Short circuit Pin 5
Input byte 60 ⇨ Short circuit Pin 7

Short circuit Byte 57 (0 = OK ; 1 = Fault)

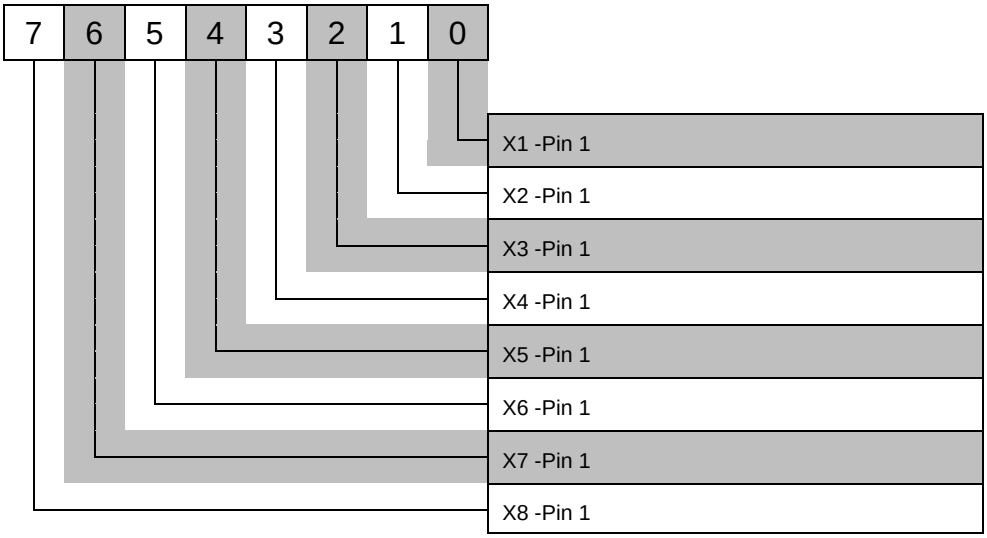

9.12 Input Byte 61…63 ⇨ Serial number

Input Byte 61 ⇨ High value

Input Byte 62 ⇨ value

Input Byte 63 ⇨ Low value

Value = Serial number

Value > 100000

9.13 Output Byte 0…15 ⇨ Analog Output at Pin 3

Output Byte 0, 1 ⇨ analog Output 0
Output Byte 2, 3 ⇨ analog Output 1
Output Byte 4, 5 ⇨ analog Output 2
Output Byte 6, 7 ⇨ analog Output 3
Output Byte 8, 9 ⇨ analog Output 4
Output Byte 10, 11 ⇨ analog Output 5
Output Byte 12, 13 ⇨ analog Output 6
Output Byte 14, 15 ⇨ analog Output 7

Value :1000 = analog value in mA (z.B. 9987 : 1000 = 9,987mA)

0	1	2	3	4	5	6	7	8	9	10	11	12	13	14	15
High AO Low X1-Pin3		AO X2-Pin3		AO X3-Pin3		AO X4-Pin3		AO X5-Pin3		AO X6-Pin3		AO X7-Pin3		AO X8-Pin3	
MSB							LSB	MSB							LSB
15	14	13	12	11	10	9	8	7	6	5	4	3	2	1	0
2^{15}	2^{14}	2^{13}	2^{12}	2^{11}	2^{10}	2^{9}	2^{8}	2^{7}	2^{6}	2^{5}	2^{4}	2^{3}	2^{2}	2^{1}	2^{0}
Byte 0								Byte 1							

z.B.

Value[mA]	hex			dex	
4,000	0F	A0		15	160
10,000	27	10		39	16
15,000	3A	98		58	152
20,000	4E	20		78	32
25,000	61	A8		97	168
	Byte 0	Byte 1		Byte 0	Byte 1

9.14 Output Byte 16…19 ⇨ Channel ON / OFF

Output Byte 16 ⇨ Channel ON / OFF on Pin 1
Output Byte 17 ⇨ Channel ON / OFF on Pin 3
Output Byte 18 ⇨ Channel ON / OFF on Pin 5
Output Byte 19 ⇨ Channel ON / OFF on Pin 7

Channel ON/OFF Byte 16 (0 = ON ; 1 = OFF)

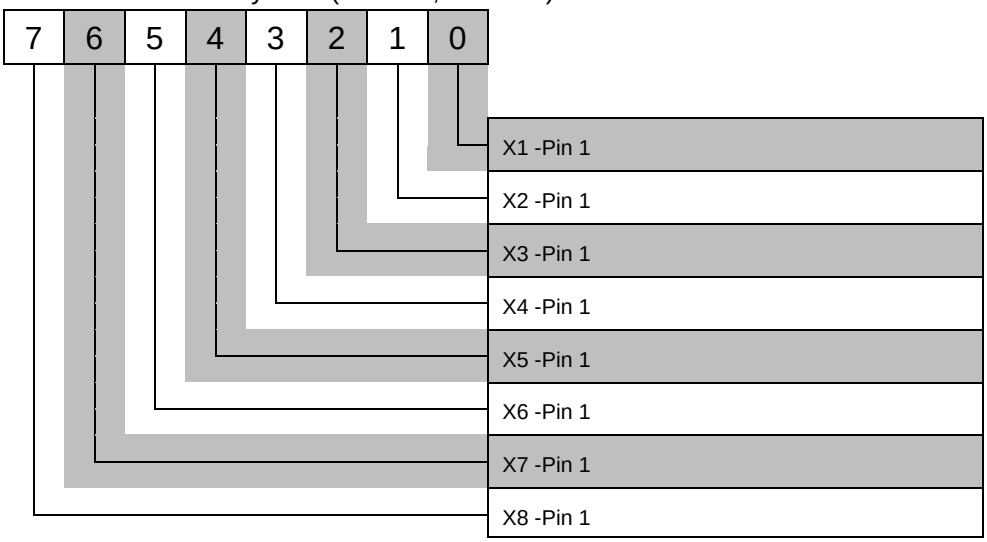

The channels can be switched on via bytes 16 to byte 18!

To turn on the function of Pin 1, 3, 5, 7 the bytes 16 to 18 are always set to "1". The DO function can be turned on and off via this Bytes.

A short circuit at DO or at DI leads to the immediate shutdown of the affected pin. Every 5 seconds, it is checked whether the short circuit is still present. Only when the error has been corrected, the pin automatic switch on.

9.15 Output Byte 21 ⇨ SwitchMode

Output Byte 21 ⇨ SwitchMode ON / OFF (default = 0 = OFF)

SwitchMode ON/OFF Byte 21 (1 = ON ; 0 = OFF)

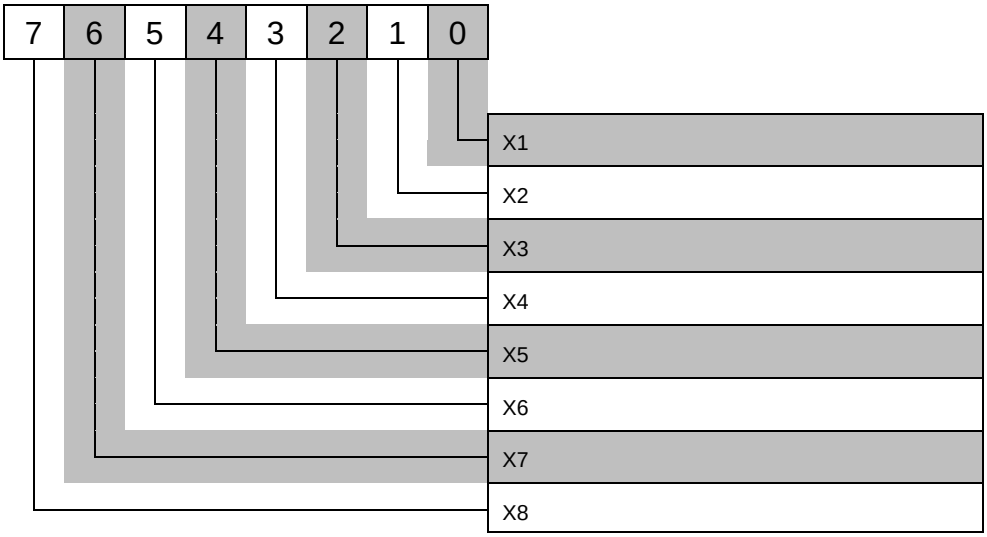

A mechanical switch can be connected to the module through the SwitchMode.

	Zone 1 Type : **14200*00 (IP20)** Zone 2 Type : **24200*00 (IP20)**	Zone 1 Type : **14200*01 (IP20)** Zone 2 Type : **24200*01 (IP20)** Zone 1 Type : **14310*01 (IP67)**	Zone 1 Type : **14200*02 (IP20)** Zone 2 Type : **24200*02 (IP20)**
1	AI / Switch Mode(-)	DO / AO / AI / Switch Mode(+)	*DI*
2	GND	GND / Switch Mode(-)	GND
3	AO / DO / Switch Mode(+)	*DI*	*DI*
4	GND	GND	GND
5	*DI*	*DI*	*DI*
6	GND	GND	GND
7	DO	DO	*DI*
8	GND	GND	GND

In SwitchMode, the module will output 4 mA at the analog output and read back the 4 mA at the analog input when the switch is closed. Then a "1" is reported on the input byte 16. If the switch is open, no current flows into the analog input and the corresponding bit is "0".

➔ The corresponding analog channels must also be activated.

9.16 Output Byte 22 ⇨ AO to DO (Type *00)

Output Byte 22 ⇨ AO to DO ON / OFF (default = 0 = AO)

Digital Mode ON/OFF Byte 22 (1 = ON ; 0 = OFF)

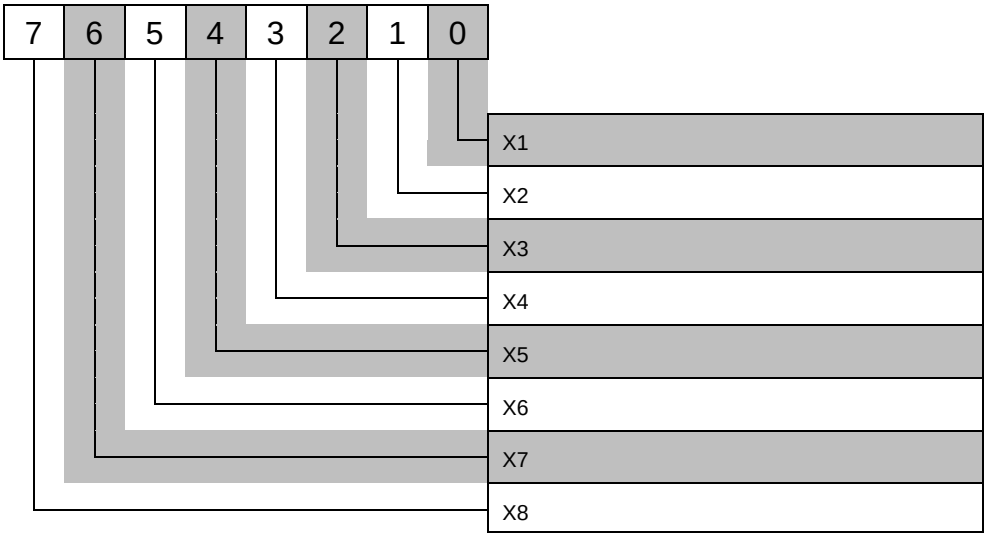

The analogue output can be used as a digital output (Imax = 25mA).

Thus, the analog output at pin 3 behaves like a digital output.
Switching on and off takes place via the Output Byte 17.

	Zone 1 Type : **14200*00 (IP20)** Zone 2 Type : **24200*00 (IP20)**	Zone 1 Type : **14200*01 (IP20)** Zone 2 Type : **24200*01 (IP20)** Zone 1 Type : **14310*01 (IP67)**	Zone 1 Type : **14200*02 (IP20)** Zone 2 Type : **24200*02 (IP20)**
1	AI / Switch Mode(-)	DO / AO / AI / Switch Mode(+)	*DI*
2	GND	GND / Switch Mode(-)	GND
3	AO / DO / Switch Mode(+)	*DI*	*DI*
4	GND	GND	GND
5	*DI*	*DI*	*DI*
6	GND	GND	GND
7	DO	DO	*DI*
8	GND	GND	GND

Open load and short circuit detection are not active on these channels.

9.17 Output Byte 23 ⇨ DO to AO (Type *01)

Output Byte 23 ⇨ DO -> AO ON / OFF (default = 0 = DO)

Digital Mode ON/OFF Byte 23 (1 = ON ; 0 = OFF)

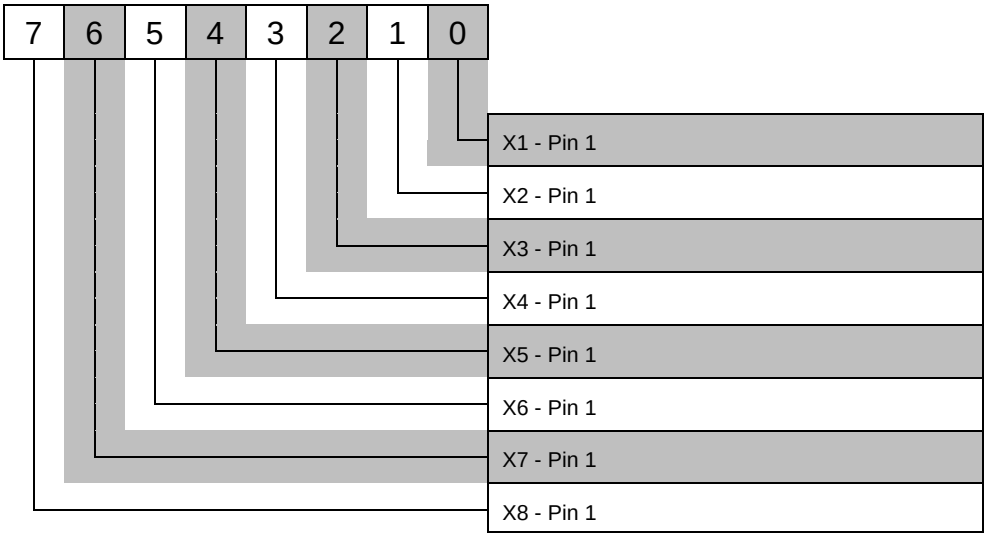

Pin 1 on **14200*01**, **24200*01 and 14310*01** can be used as DO, AO or AI (Imax = 25mA).

	Zone 1 Type : **14200*00 (IP20)** Zone 2 Type : **24200*00 (IP20)**	Zone 1 Type : **14200*01 (IP20)** Zone 2 Type : **24200*01 (IP20)** Zone 1 Type : **14310*01 (IP67)**	Zone 1 Type : **14200*02 (IP20)** Zone 2 Type : **24200*02 (IP20)**
1	AI / Switch Mode(-)	DO / AO / AI / Switch Mode(+)	*DI*
2	GND	GND / Switch Mode(-)	GND
3	AO / DO / Switch Mode(+)	*DI*	*DI*
4	GND	GND	GND
5	*DI*	*DI*	*DI*
6	GND	GND	GND
7	DO	DO	*DI*
8	GND	GND	GND

9.18 Output Byte 24 ⇨ DO to AI (Type *01)

Output Byte 23 ⇨ DO -> AI ON / OFF (default = 0 = DO)

Digital Mode ON/OFF Byte 24 (1 = ON ; 0 = OFF)

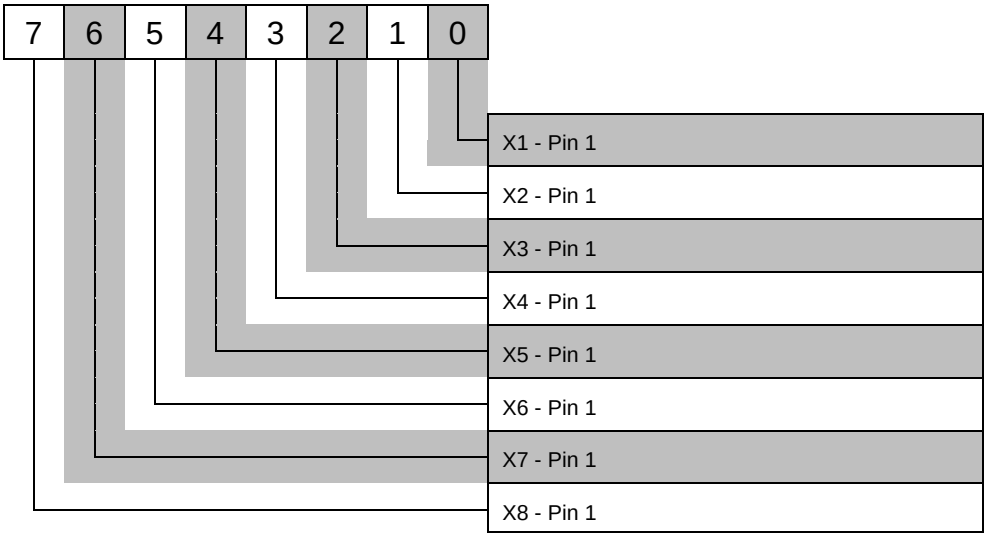

Pin 1 on **14200*01**, **24200*01 and 14310*01** can be used as DO, AO or AI (Imax = 25mA).

	Zone 1 Type : **14200*00 (IP20)** Zone 2 Type : **24200*00 (IP20)**	Zone 1 Type : **14200*01 (IP20)** Zone 2 Type : **24200*01 (IP20)** Zone 1 Type : **14310*01 (IP67)**	Zone 1 Type : **14200*02 (IP20)** Zone 2 Type : **24200*02 (IP20)**
1	AI / Switch Mode(-)	DO / AO / AI / Switch Mode(+)	*DI*
2	GND	GND / Switch Mode(-)	GND
3	AO / DO / Switch Mode(+)	*DI*	*DI*
4	GND	GND	GND
5	*DI*	*DI*	*DI*
6	GND	GND	GND
7	DO	DO	*DI*
8	GND	GND	GND

9.19 Output Byte 20, 25…63 ⇨ Reserve

All „Res” bytes have to be still set to “0”

10 Temperature deratings

Number of simultaneously usable channels.

Not all channels may be used at the same time, if the service temperature will rise > 50°C.

The actual temperature value is transferred via the communication data.

	40°C	50°C	60°C	70°C
AI	8	8	8	8
AO	8	8	5	2
DI	8	8	8	8
DO	8	8	5	2

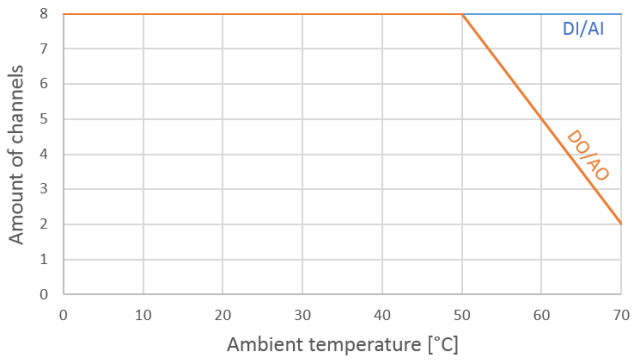

The device is equipped with a temperature monitoring and measures permanently the operating temperature. If the operating temperature of module exceeds 75°C, an error message is displayed in the communication data and at 85°C all output channels and the communication are switched off.

The module automatically does switch back to operating mode, as soon as the operating temperature has reached a value < 75°C.

10.1 Power Dissipation

Type *00

Power Dissipation max. 15 W

Calculation Power Dissipation:

Idling: 5 W

AI = 150 mW per channel (8x = 1,2 W) ; AO = 600 mW per channel (8x = 4,8 W)

DI = 100 mW per channel (8x = 0,8 W) ; DO = 400 mW per channel (8x = 3,2 W)

e.g.	Idling		2 AI		1 AO		4 DI		4 DO		
	5 W	+	0,3 W	+	0,6 W	+	0,4 W	+	1,6 W	=	7,9 W

Type *01

Power Dissipation max. 14,6 W

Calculation Power Dissipation:

Idling: 5 W

DO (AO / AI) = 600 mW per channel (8x = 4,8 W)

DI = 100 mW per channel (16x = 1,6 W) ; DO = 400 mW per channel (8x = 3,2 W)

Type *02

Power Dissipation max. 8,2 W

Calculation Power Dissipation:

Idling: 5 W

DI = 100 mW per channel (32x = 3,2 W)

11 Technical Data

BEx Remote IO modules for Ex Zone 1/21 or 2/22

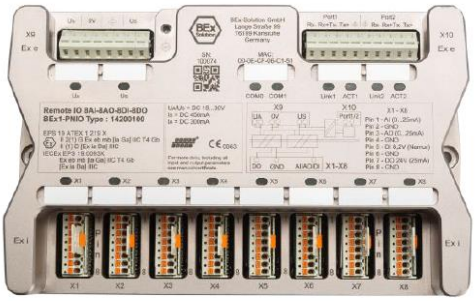

or

Compact Remote IO modules for Ex Zone 1/21 or Zone 2/22 with Profinet or Modbus TCP/IP.
The modules include busnode, isolating amplifier and 32 intrinsically safe analog and digital IO channels on smallest space.

BEx1 module can be installed in Zone 1/21 with certified Ex e enclosure and connects sensors and actuators from Zone 0/20.

BEx2 module can be installed in Zone 2/22, in a suitable housing according EN 60079-7:2018 with a protection degree of at least IP 54 and connects sensors and actuators from Zone 0/20.

Feature

- Fully potted → extreme robust
- IO variations
  - 16xDI Namur / 16xDO
  - 32xDI Namur
  - 8xDI Namur / 8xDO / 8xAI / 8xAO
  - 8xDI Namur / 16xDO / 8xAI
  - 8xDI Namur / 8xDO / 8xSwitch Mode
- None configuration on module required
- Separate power supply for sensor and actuator
- Comprehensive diagnostics for each channel
  - open load detection
  - prefault detection
  - short circuit detection
- Galvanic separation between channel and system
- Internal temperature monitoring
- Operating hour counter

BEx1 Explosion protection

EPS 19 ATEX 1 219 X
II 2(1) G Ex eb mb [ia Ga] IIC T4 Gb
II (1) D [Ex ia Da] IIIC
IECEx EPS 19.0093X
Ex eb mb [ia Ga] IIC T4 Gb
[Ex ia Da] IIIC

BEx2 Explosion protection

EPS 19 ATEX 1 248 X
II 3(1) G Ex ec mc [ia Ga] IIC T4 Gc
II (1) D [Ex ia Da] IIIC
IECEx EPS 19. 0111X
Ex ec mc [ia Ga] IIC T4 Gc
[Ex ia Da] IIIC

Power supply

Operation voltage U_A/U_S	DC 18...30V
Current module and sensor supply I_S	DC 450 mA
Current actuator supply I_A	DC 300 mA
Power dissipation	max. 15 W
Reverse polarity protection	Yes
LED Voltage > 18V	Green
LED Undervoltage	Red

Fieldbus data

Addressing Profinet	via DCP
Addressing Modbus TCP/IP	DHCP or fix
Transfer Rate	10/100 MBit/s
Delay in signal change	< 10ms
LED Ethernet status LINK	Green
LED Ethernet status ACT	Yellow
LED Modul status	Green / Red
LED digital output on	Yellow
LED error detection	Red

Ambient conditions

Range of the service temperature after installation inside additional enclosure	-40°C ... +70°C
Storage temperature	-40°C ... +80°C
Enclosure type (EN 60529)	IP 20

Mechanical data

Dimensions (LxWxH)	214 x 132 x 65 mm
Mounting holes	∅ 5,2
Mounting space	200 mm
Mounting position	any position
Weight	approx. 2700 g
Housing material	Aluminium (electroplated)
Housing marking	laser engraving

Illustration title picture is an example of BEx1 type 14200100
Reserve technical changes – 9000_datasheet_BEx-modules_2020-01-09-EN

BEx-Solution GmbH | Lange Str. 99 | 76199 Karlsruhe | Germany | T +49 (0) 721 60 90 45 33 | info@bex-solution.com | bex-solution.com

BEx1 IO module IP67 Ex i for Zone 1/21

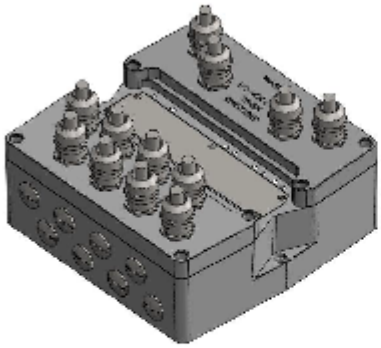

or

Compact IO module for Ex Zone 1/21 with Profinet or Modbus TCP/IP.
The module include busnode, isolating amplifier and **32 intrinsically safe** analog and digital IO channels on smallest space.

BEx1 module can be installed directly in Zone 1/21 and connects sensors and actuators from Zone 0/20.

Feature

- Fully potted → extreme robust
- IO variations 16DI 8DO 8DO(AIO)
  - 16xDI Namur / 16xDO
  - 16xDI Namur / 8xDO / 8xAIO
  - 16xDI Namur / 8xDO / 8xSwitching Mode
- None configuration on module required
- Separate power supply for sensor and actuator
- Comprehensive diagnostics for each channel
  - open load detection
  - prefault detection
  - short circuit detection
- Galvanic separation between channel and system
- Internal temperature monitoring
- Operating hour counter

BEx1 Explosion protection

EPS 19 ATEX 1 219 X
EPS 22 UKEX 1 045 X
II 2(1) G Ex eb mb [ia Ga] IIC T4 Gb
II 2(1) D Ex tb [ia Da] IIIC T110°C Db
IECEx EPS 19.0093X
Ex eb mb [ia Ga] IIC T4 Gb
Ex tb [ia Da] IIIC T110°C Db

Power supply

Operation voltage U_A/U_S	DC 18...30V
Current module and sensor supply I_S	DC 450 mA
Current actuator supply I_A	DC 300 mA
Power dissipation	max. 15 W
Reverse polarity protection	Yes
LED Voltage > 18V	Green
LED Undervoltage	Red

Fieldbus data

Addressing Profinet	via DCP
Addressing Modbus TCP/IP	DHCP or fix
Transfer Rate	10/100 MBit/s
Delay in signal change	< 10ms
LED Ethernet status LINK	Green
LED Ethernet status ACT	Yellow
LED Modul status	Green / Red
LED digital output on	Yellow
LED error detection	Red

Ambient conditions

Operating temperature	-40°C ... +70°C
Storage temperature	-40°C ... +80°C
Enclosure type (EN 60529)	IP66 / IP67

Mechanical data

Dimensions (LxWxH)	214 x 206 x 115 mm
Mounting holes	Ø 6,5
Mounting space	200 mm
Mounting position	any position
Weight	approx. 5400 g
Housing material	Aluminium (electroplated)
Housing marking	laser engraving
Vibration (EN 60068)	20g
Shock (EN 60068)	50g
Cable glands (stainless steel)	M20x1,5

Reserve technical changes – 9100_datasheet_BEx1-IP67-Exi_2021-12-10-EN
BEx-Solution GmbH | Lange Str. 99 | 76199 Karlsruhe | Germany | T +49 (0) 721 60 90 45 33 | info@bex-solution.com | bex-solution.com

IO - Functions

	Zone 1 Type : **14200*00 (IP20)** Zone 2 Type : **24200*00 (IP20)**	Zone 1 Type : **14200*01 (IP20)** Zone 2 Type : **24200*01 (IP20)** Zone 1 Type : **14310*01 (IP67)** 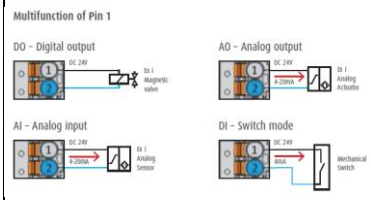	Zone 1 Type : **14200*02 (IP20)** Zone 2 Type : **24200*02 (IP20)**
1	AI / Switch Mode(-)	DO / AO / AI / Switch Mode(+)	*DI*
2	GND	GND / Switch Mode(-)	GND
3	AO / DO / Switch Mode(+)	*DI*	*DI*
4	GND	GND	GND
5	*DI*	*DI*	*DI*
6	GND	GND	GND
7	DO	DO	*DI*
8	GND	GND	GND

DI Namur 8,2V
(I<1,2mA = on)
(I>2,1mA = off)

DO (can also be used as power supply) ..... 24V (I_{max} = 25mA)

AI and AO 24V
4..20mA (0..25mA)

Resolution AI and AO ..... 16 Bit
Measurement deviation (at +25°C) ..... ± 0,1% in range 4 ... 20mA
Ambient temperature influence ..... ± 0,01%/K

AO to DO, DO to AO, DO to AI ..... 24V (I_{max} = 25mA)
Switch Mode ..... 24V(I_{max} = 4mA)

Diagnoses

Open load detection ..... Yes, per pin
Prefault detection ..... Yes, per pin
Short circuit detection ..... Yes, per pin

Operating hour counter ..... 24 Bit

Electrical Connections

⏚ Earthing / Equipotential bonding via M4 screw and eyelet
Cable cross-section ..... min. 4,0 mm²

CAGE CLAMP® connection technology
X1-X8 (pluggable) Inputs / Outputs (Ex i)
Cable cross-section ..... max. 1,5 mm²

X9 Power supply (Ex e)
Cable cross-section ..... max. 2,5 mm²

X10 Bus (Ex e)
Cable cross-section ..... max. 2,5 mm²

Commercial Data

Zone 1/21

- BEx1-PNIO 8AI 8AO 8DI 8DO Type: 14200100
- BEx1-PNIO 16DI 8DO 8DO(AIO) Type: 14200101
- BEx1-PNIO 32DI Type: 14200102

Zone 2 /22

- BEx2-PNIO 8AI 8AO 8DI 8DO Type: 24200100
- BEx2-PNIO 16DI 8DO 8DO(AIO) Type: 24200101
- BEx2-PNIO 32DI Type: 24200102

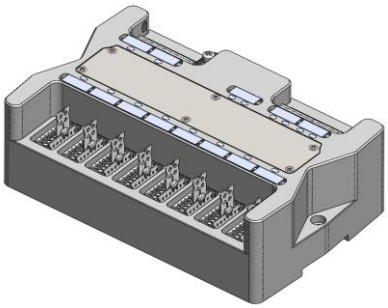

Zone 1/21

- BEx1-Modbus 8AI 8AO 8DI 8DO Type: 14200300
- BEx1-Modbus 16DI 8DO 8DO(AIO) Type: 14200301
- BEx1-Modbus 32DI Type: 14200302

Zone 2 /22

- BEx2-Modbus 8AI 8AO 8DI 8DO Type: 24200300
- BEx2-Modbus 16DI 8DO 8DO(AIO) Type: 24200301
- BEx2-Modbus 32DI Type: 24200302

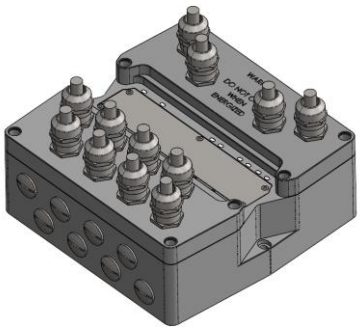

Zone 1/21

- BEx1-PNIO 16DI 8DO 8DO(AIO) Type: 14310101
- BEx1-Modbus 16DI 8DO 8DO(AIO) Type: 14310301

Country of origin..... DE
Packaging units.....1
Customs number.....85176200

12 Approval safety data

Max. U_m X9 / X10 DC 30 V

Terminals	Parameter
Terminal block X1 to X8	(Output parameters of each clamp, clamps are not allowed to be combined)
$Clamp_{26V}$	U_0 = 26 V d.c. I_0 = 82 mA P_0 = 533 mW

IIC				
L_0	3 mH	1 mH	0,5 mH	0 mH
C_0	42 nF	62 nF	78 nF	99 nF
Group IIB / III				
L_0	20 mH	2 mH	0,5 mH	0 mH
C_0	350 nF	350 nF	490 nF	770 nF

$Clamp_{9,6V}$	U_0 = 9,6 V d.c. I_0 = 31 mA P_0 = 75 mW

IIC				
L_0	49 mH	10 mH	1 mH	0 mH
C_0	310 nF	640 nF	1.1 µF	3.6 µF
Group IIB / III				
L_0	100 mH	10 mH	1 mH	0 mH
C_0	2 µF	3.6 µF	6.1 µF	26 µF

$Clamp_{GND}$	galvanically separated from input GND

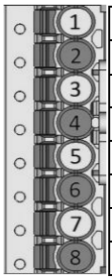

	Type : **14200*00** Type : **24200*00**	Type : **14200*01** Type : **24200*01** Type : **14310*01**	Type : **14200*02** Type : **24200*02**
Clamp 1	U_0 = 26 V d.c.	U_0 = 26 V d.c.	*U_0 = 9,6 V d.c.*
Clamp 2	GND	GND	GND
Clamp 3	U_0 = 26 V d.c.	*U_0 = 9,6 V d.c.*	*U_0 = 9,6 V d.c.*
Clamp 4	GND	GND	GND
Clamp 5	*U_0 = 9,6 V d.c.*	*U_0 = 9,6 V d.c.*	*U_0 = 9,6 V d.c.*
Clamp 6	GND	GND	GND
Clamp 7	U_0 = 26 V d.c.	U_0 = 26 V d.c.	*U_0 = 9,6 V d.c.*
Clamp 8	GND	GND	GND

13 Explosion Protection

13.1 Specific Conditions of use for BEx1

Type 14200*00, 14200*01, 14200*02, 14310*01

- The non-intrinsically-safe terminals of the equipment (terminals X9 and X10) shall be supplied by a source providing SELV output circuit or conforming to IEC 61010 or IEC 60950 (Um=30V DC).

Type 14200*00, 14200*01, 14200*02

- These Remote IO shall be mounted in an enclosure which is fully certified according to the directive 2014/34/EU and the IECEx-Scheme. The installation of the IO modules of the types mentioned above shall be acknowledged by the certification of the enclosure.
- The permitted range of the service temperature after installation inside the additional enclosure is -40 °C to +70 °C.

13.2 Specific Conditions of use for BEx2

Type 24200*00, 24200*01, 24200*02

- The BEx2 module must be installed in a suitable housing according the EN 60079-7:2018 in such a way, that a degree of protection of at least IP 54 is reached.
- The non-intrinsically safe terminals of the equipment (terminals X9 and X10) shall be supplied by a source providing SELV output circuit or conforming to IEC 61010 or IEC 60950 (Um=30V DC).

14 Service, Maintenance

The module is maintenance-free.

Observe the intended function.

Follow the guidelines of IEC / EN 60079-17.

According to EN / IEC 60079-17 and EN / IEC 60079-19, the operator of electrical installations in potentially explosive atmospheres is obliged to have these systems checked by a qualified electrician to ensure that they are in a proper condition.

15 Repair

The module is complete sealing compound potted and for that basically not repairable. If you have any questions, please contact BEx-Solution GmbH.

16 Disposal

Observe the national waste disposal regulations!

17 Transport and Storage

Transport and storage are only allowed in original packaging.

18 Accessories / Spare parts

On request

	**Spring strip with gripping plate for Type *00, *01, *02** Cable bundling function and unlocking aid 8-pole Use for terminal strip X1-X8 Source of supply: Wago Article number: 2091-1108 / 002-000
	**Snap-on tag color white - UTC-EM (20*8) for IP20 Modul**e Use labeling terminal strips Source of supply: Phoenix Contact Article number: 0801477
	**Coding key carrier; suitable for pitch 3.5 mm for Type *00, *01, *02** Use for terminal strip X1-X8 Source of supply: Wago Article number: 2091-1610
	**Operating tool; plastic for all Types** Use for terminal block X9 - X10 Source of supply: Wago Article number: 236-332
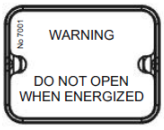	**Ex e cover cap for Type *00, *01, *02** Use for terminal strip X9 Source of supply: BEx-Solution Article number: 7001
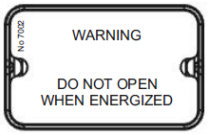	**Ex e cover cap for Type *00, *01, *02** Use for terminal strip X10 Source of supply: BEx-Solution Article number: 7002
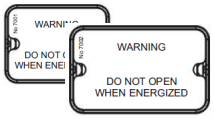	**Ex e cover cap set for Type *00, *01, *02** Use for terminal strip X9 and X10 Source of supply: BEx-Solution Article number: 7000 (included 7001 + 7002)

19 Troubleshooting

Disruption	Possible causes	Action
The channels do not react	Each channel must be switched on individually	Output Bytes 16 to 19 are set to 0xFF, so all channels are switched on and the outputs are set.
Digital output does not switch anymore	If there is an overload or a short circuit at an output, it will be switched off. The output remains switched off even after removing the error.	To reset the short-circuit memory, the output must be switched off via the PLC.
Error message to unused pins.	No sensors or actuators connected to these pins	The pins can be switched off individually via the Output Bytes 16 to 19.

EU Declaration of Conformity

BEx EU/UK - Konformitätserklärung

EU/UK - Declaration of conformity / UE/UK - Déclaration de conformité

BEx-Solution GmbH
Lange Str. 99
76199 Karlsruhe
Germany

Wir erklären in alleiniger Verantwortung, dass das hier genannte Produkt den aufgeführten Richtlinien (RL) und entsprechenden harmonisierten Normen entspricht:
We declare in sole responsibility that the product complies with the listed directives and harmonized/ designated standards:
Nous déclarons sous notre seule responsabilité que le produit est conforme aux directives et aux normes harmonisées/désignées énumérées :

BEx1 Remote IO Modul IP20 Ex i
Type 14200*00 / 14200*01 / 14200*02

Richtlinien / directives / directives	***Normen / Designated standards / Normes***
ATEX 2014/34/EU UK SI 2016 No. 1107	EN IEC 60079-0:2018 EN IEC 60079-7:2015/A1:2018 EN 60079-11:2012 EN 60079-18:2015/A1:2017
EMV / EMC / CEM 2014/30/EU UK SI 2016 No 1091	EN IEC 61000-6-2:2019-11 EN IEC 61000-6-4:2020-09
RoHS 2011/65/EU 2015/863/EU UK SI 2012 No 3032	
REACH 1907/2006/EG UK SI 2021 No 904	

Kennzeichnung / Marking / Marquage

Ex II 2(1) G Ex eb mb [ia Ga] IIC T4 Gb
II (1) D [Ex ia Da] IIIC

CE 2004
UK CA 8507

EU/UK-Baumusterprüfbescheinigung / EU/UK-Type Examination / Examen de type UE/UK

EPS 19 ATEX 1 219 X
EPS 22 UKEX 1 045 X

Bureau Veritas Consumer Products Services Germany GmbH
Notified body No. 2004
Approved body No. 8507
Wilhelm-Hennemann-Straße 8, 19061 Schwerin, Germany

Qualitätsmanagement System / Quality Management System / Système de gestion de qualité

ISO 9001:2015

Karlsruhe, 2022 / 01 / 14

Ralf Bauermeister - CEO

9003_EU-UK-Konf_BEx1-IP20-Exi_2022-01-14

BEx EU/UK - Konformitätserklärung

EU/UK- Declaration of conformity / UE/UK – Déclaration de conformité

BEx-Solution GmbH
Lange Str. 99
76199 Karlsruhe
Germany

Wir erklären in alleiniger Verantwortung, dass das hier genannte Produkt den aufgeführten Richtlinien (RL) und entsprechenden harmonisierten Normen entspricht:
We declare in sole responsibility that the product complies with the listed directives and harmonized/ designated standards:
Nous déclarons sous notre seule responsabilité que le produit est conforme aux directives et aux normes harmonisées/désignées énumérées :

BEx1 Remote IO Modul IP67 Ex i
Type 14310*01

Richtlinien / directives / directives	***Normen / Designated standards / Normes***
ATEX 2014/34/EU UK SI 2016 No. 1107	EN IEC 60079-0:2018 EN IEC 60079-7:2015/A1:2018 EN 60079-11:2012 EN 60079-18:2015/A1:2017 EN 60079-31:2014
EMV / EMC / CEM 2014/30/EU UK SI 2016 No 1091	EN IEC 61000-6-2:2019-11 EN IEC 61000-6-4:2020-09
RoHS 2011/65/EU 2015/863/EU UK SI 2012 No 3032	
REACH 1907/2006/EG UK SI 2021 No 904	

Kennzeichnung / Marking / Marquage

Ex II 2(1) G Ex eb mb [ia Ga] IIC T4 Gb
II 2(1) D Ex tb [ia Da] IIIC T110°C Db

CE 2004
UK CA 8507

EU/UK-Baumusterprüfbescheinigung / EU/UK-Type Examination / Examen de type UE/UK

EPS 19 ATEX 1 219 X
EPS 22 UKEX 1 045 X

Bureau Veritas Consumer Products Services Germany GmbH
Notified body No. 2004
Approved body No. 8507
Wilhelm-Hennemann-Straße 8, 19061 Schwerin, Germany

Qualitätsmanagement System / Quality Management System / Système de gestion de qualité

ISO 9001:2015

Karlsruhe, 2022 / 01 / 14

Ralf Bauermeister - CEO

9103_EU-UK-Konf_BEx1-IP67-Exi_2022-01-14

BEx EU/UK - Konformitätserklärung

EU/UK- Declaration of conformity / UE/UK – Déclaration de conformité

BEx-Solution GmbH
Lange Str. 99
76199 Karlsruhe
Germany

Wir erklären in alleiniger Verantwortung, dass das hier genannte Produkt den aufgeführten Richtlinien (RL) und entsprechenden harmonisierten Normen entspricht:
We declare in sole responsibility that the product compiles with the listed directives and harmonized/ designated standards:
Nous déclarons sous notre seule responsabilité que le produit est conforme aux directives et aux normes harmonisées/désignées énumérées :

BEx2 Remote IO Modul IP20 Ex i
Type 24200*00 / 24200*01 / 24200*02

Richtlinien / directives / directives	***Normen / Designated standards / Normes***
ATEX 2014/34/EU UK SI 2016 No. 1107	EN IEC 60079-0:2018 EN IEC 60079-7:2015/A1:2018 EN 60079-11:2012 EN 60079-18:2015/A1:2017
EMV / EMC / CEM 2014/30/EU UK SI 2016 No 1091	EN IEC 61000-6-2:2019-11 EN IEC 61000-6-4:2020-09
RoHS 2011/65/EU 2015/863/EU UK SI 2012 No 3032	
REACH 1907/2006/EG UK SI 2021 No 904	

Kennzeichnung / Marking / Marquage

Ex II 3(1) G Ex ec mc [ia Ga] IIC T4 Gc
II (1) D [Ex ia Da] IIIC

CE UK CA

EU/UK-Konformitätszertifikat / EU/UK-Certificate of conformity/ Certificat de conformité UE/UK

EPS 19 ATEX 1 248 X
EPS 22 UKEX 1 046 X

Bureau Veritas Consumer Products Services Germany GmbH
Notified body No. 2004
Approved body No. 8507
Wilhelm-Hennemann-Straße 8, 19061 Schwerin, Germany

Qualitätsmanagement System / Quality Management System / Système de gestion de qualité

ISO 9001:2015

Karlsruhe, 2022 / 01 / 14

Ralf Bauermeister - CEO

9203_EU-UK-Konf_BEx2-IP20-Exi_2022-01-14

List of Abbreviations

ATEX	**AT**mosphères **Ex**plosibles
AI	Analog Input
AO	Analog Output
BEx1	Product name
CE	Communauté Européenne
DI	Digital Input
DO	Digital Output
Diag	Diagnoses
EMC	Electromagnetic Compatibility
EU	European Union
IEC	International Electrotechnical Commission
IP	International Protection (code)
IO	Input-Output
LED	Light-Emitting Diode
Pin	Terminal
Res	Reserve
UKCA	United Kingdom Conformity Assessed

Annex 1 - Byte allocation of the different modules

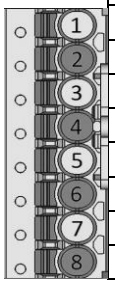

	Zone 1 Type : **14200*00 (IP20)** Zone 2 Type : **24200*00 (IP20)**	Zone 1 Type : **14200*01 (IP20)** Zone 2 Type : **24200*01 (IP20)** Zone 1 Type : **14310*01 (IP67)**	Zone 1 Type : **14200*02 (IP20)** Zone 2 Type : **24200*02 (IP20)**
1	AI / Switch Mode(-)	DO / AO / AI / Switch Mode(+)	*DI*
2	GND	GND / Switch Mode(-)	GND
3	AO / DO / Switch Mode(+)	*DI*	*DI*
4	GND	GND	GND
5	*DI*	*DI*	*DI*
6	GND	GND	GND
7	DO	DO	*DI*
8	GND	GND	GND

IB = Input byte (Modul ➔ SPS)
OB = Output byte (SPS ➔ Modul)

	8xDI / 8xDO / 8xAI / 8xAO 8xDI / 16xDO / 8xAI 8xDI / 8xDO / 8xSwitch Mode Zone 1 Type : **14200*00 (IP20)** Zone 2 Type : **24200*00 (IP20**			16DI / 16DO 16DI / 8DO / 8AIO 16xDI/ 8xDO/ 8xSwitch Mode Zone 1 Type : **14200*01 (IP20)** Zone 2 Type : **24200*01 (IP20)** Zone 1 Type : **14310*01 (IP67)**			32DI Zone 1 Type : **14200*02 (IP20)** Zone 2 Type : **24200*02 (IP20)**		
PIN	Function	activated	IO Data	Function	activated	IO Data	Function	activated	IO Data
1	AI	OB 16	IB 0..15	DO	OB 16	OB 16	DI	OB 16	IB 16
	Switch Mode (-)	OB 16 OB 21	IB 16	AO	OB 16 OB 23	OB 0..15			
				AI	OB 16 OB 24	IB 0..15			
				Switch Mode (+)	OB 16 OB 21	IB 16			
2	GND			GND / SwitchMode (-)			GND		
3	AO	OB 17	OB 0..15	DI	OB 17	IB 17	DI	OB 17	IB 17
	DO	OB 17 OB 22	OB 17						
	Switch Mode (+)	OB 17 OB 21	IB 16						
4	GND			GND			GND		
5	DI	OB 18	IB 18	DI	OB 18	IB 18	DI	OB 18	IB 18
6	GND			GND			GND		
7	DO	OB 19	OB 19	DO	OB 19	OB 19	DI	OB 19	IB 19
8	GND			GND			GND		

Annex 2 - How to start data exchange with PLC

All values will be shown as decimal and in brackets in hexadecimal

- ⇨ To activate all function (AI, AO, DI, DO) for all channels you have to set the Byte 16 to 19 to **255** (0xFF) continuously (in each cycle).
- ⇨ If you don't use a channel, set the corresponding bit to **0** (0x00).

64Output byte – (SPS ➔ Modul)

0	1	2	3	4	5	6	7	8	9
High AO X1	Low	AO X2		AO X3		AO X4		AO X5	

16	17	18	19	20	21	22	23	24	25
ON/OFF X1-X8 Pin 1	ON/OFF X1-X8 Pin 3	ON/OFF X1-X8 Pin 5	ON/OFF X1-X8 Pin 7	Res	Switch mode X1-X8	AO->DO Type *00 X1-X8 Pin 3	DO->AO Type *01 X1-X8 Pin 1	DO->AI Type *01 X1-X8 Pin 1	Re

If you only use a part of this function, here are some examples of how to set the bytes 16 to 19

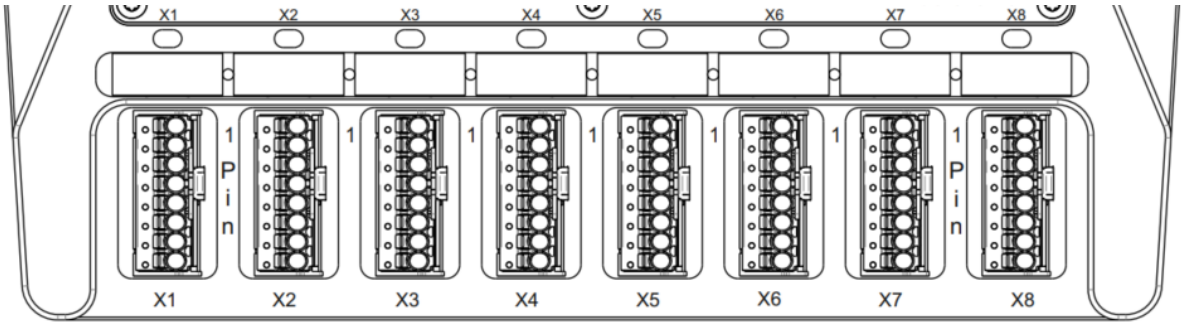

- ⇨ **Byte 16 for the analog input (Type *00)**

If there are 3 AI Sensors connected on X1, X4 and X8

Clamp	X1	X2	X3	X4	X5	X6	X7	X8
Value	1	2	4	8	16	32	64	128
Connected	yes	-	-	yes	-	-	-	yes

Just add the values: 1 + 8 + 128 = 137 Binär : 10001001 = 137

Byte 16 = 137 (0x89)

⇨ **Byte 17 for the analog output (Type *00)**

If there are 4 AO Actuators connected on X3, X4,X6 and X8

Clamp	X1	X2	X3	X4	X5	X6	X7	X8
Value	1	2	4	8	16	32	64	128
Connected	-	-	yes	yes	-	yes	-	yes

Just add the values : 4 + 8 + 32 + 128 = 172 Binär : 10101100 = 172

Byte 17 = 172 (0xAC)

⇨ **Byte 18 for the digital input (Type *00, *01 and *02)**

If there are 7 DI Namur sensors connected on X1, X2, X4, X6, X7 and X8

Clamp	X1	X2	X3	X4	X5	X6	X7	X8
Value	1	2	4	8	16	32	64	128
Connected	yes	yes	-	yes	-	yes	yes	yes

Just add the values : 1 + 2 + 8 + 32 + 64 + 128 = 235 Binär : 11101011 = 235

Byte 18 = 235 (0xEB)

⇨ **Byte 19 for the digital output (Type *00 and *01)**

If there are 4 DO Actuators connected on X3, X5, X6 and X7

Clamp	X1	X2	X3	X4	X5	X6	X7	X8
Value	1	2	4	8	16	32	64	128
Connected	-	-	yes	-	yes	yes	yes	-

Just add the values : 4 + 16 + 32 + 64 = 116 Binär : 01110100 = 116

Byte 19 = 116 (0x74)

You can set and reset this value in your PLC program to turn on and off the DO channels

⇨ Byte 21 for the switch mode (Type *00 and *01)

If you use this mode you also have to turn on the equivalent bit in byte 16 and 17 (Type *00) according Byte 16 (Type *01)

Three switches on clamp X4, X6, X8

Clamp	X1	X2	X3	X4	X5	X6	X7	X8
Value	1	2	4	8	16	32	64	128
Connected	-	-	-	yes	-	yes	-	yes

Just add the values : 8 + 32 + 128 = 168 Binär : 10101000 = 168 dez

Byte 21 = 168 (0xA8)

⇨ Byte 22 mode "AO to DO" (Type *00)

If you use this mode you also have to turn on the equivalent bit in byte 17.

If you have four DO Actuators connected on X1, X3, X4, X6 and X8.

Clamp	X1	X2	X3	X4	X5	X6	X7	X8
Value	1	2	4	8	16	32	64	128
Connected	yes	-	yes	yes	-	yes	-	yes
Byte 17	1		1	1		1		1
Byte 22	1		1	1		1		1

Just add the values: 1 + 4 + 8 + 32 + 128 = 173 Binär: 10101101= 173 dez

Byte 17 = 173 (0xAD) – to turn on the channels

Byte 22 = 173 (0xAD) – for activating the function AO -> DO

The output can be turn on and off via the Byte 17.

⇨ Byte 23 mode "DO to AO" (Type *01)

If you use this mode you also have to turn on the equivalent bit in byte 16.

If you have four AO Actuators connected on X2, X5, X6 and X7.

Clamp	X1	X2	X3	X4	X5	X6	X7	X8
Value	1	2	4	8	16	32	64	128
Connected	-	yes	-	-	yes	yes	yes	-
Byte 16		1			1	1	1	
Byte 23		1			1	1	1	

Just add the values: 2 + 16 + 32 + 64 = 114 Binär: 1110010 = 114 dez

Byte 16 = 114 (0x72) – to turn on the channels

Byte 23 = 114 (0x72) – for activating the function AO -> DO

The analog Values can be set via output Byte 0..15.

⇨ Byte 24 mode "DO to AI" (Type *01)

If you use this mode you also have to turn on the equivalent bit in byte 16.

If you have three AI Sensors connected on X3, X5 and X6.

Clamp	X1	X2	X3	X4	X5	X6	X7	X8
Value	1	2	4	8	16	32	64	128
Connected	-	-	yes	-	yes	yes		-
Byte 16			1		1	1		
Byte 24			1		1	1		

Just add the values: 4 + 16 + 32 = 52 Binär: 0110100= 52 dez

Byte 16 = 52 (0x34) – to turn on the channels

Byte 24 = 52 (0x34) – for activating the function AO -> DO

The analog Values are on the input Byte 0..15.

Complete Example (Type *00)

3x AI X2, X7, X8 (AI + und AI -)

4x AO X1, X2, X3, X5 (AO + und AO-)

6x DI X2, X3, X4, X6, X7, X8 (DI + und DI -)

7x DO X1, X3, X4, X5, X6, X7, X8 (DO + und DO -)

2x “switch mode” X4, X6 (SW + und SW -)

2x “AO to DO” mode X7, X8 (Power supply AI +)

Clamp	X1	X2	X3	X4	X5	X6	X7	X8	Result
Value (2x)	1	2	4	8	16	32	64	128	
Pin 1 (Byte 16)	-	AI -	-	SW -	-	SW -	AI -	AI -	234
Pin 2 - GND									
Pin 3 (Byte 17)	AO +	AO +	AO +	SW+	AO +	SW+	AI +	AI +	255
Pin 4 - GND	AO -	AO -	AO -		AO -				
Pin 5 (Byte 18)	-	DI +	DI +	DI +	-	DI +	DI +	DI +	238
Pin 6 – GND		DI -	DI -	DI -		DI -	DI -	DI -	
Pin 7 (Byte 19)	DO +	AI +	DO +	DO +	DO +	DO +	DO +	DO +	255
Pin 8 - GND	DO -		DO -	DO -	DO -	DO -	DO -	DO -	
Switch (Byte 21)	-	-	-	yes	-	yes	-	-	40
AOtoDO(Byte 22)	-	-	-	-	-	-	yes	yes	192

For this example, output bytes have to be written into the Bytes 16 to 22.

These values must be transferred each cycle (continuous).

16	17	18	19	20	21	22	23	24
ON/OFF X1-X8 Pin 1	ON/OFF X1-X8 Pin 3	ON/OFF X1-X8 Pin 5	ON/OFF X1-X8 Pin 7	Res	Switch X1-X8 1 - 3	AO to DO X1-X8 Pin 3	DO->AO Type *01 X1-X8 Pin 1	DO->AI Type *01 X1-X8 Pin 1
234	**255**	**238**	**255**	**0**	**40**	**192**	**0**	**0**
0xEA	**0xFF**	**0xEE**	**0xFF**	**0x00**	**0x28**	**0xC0**	**0x00**	**0x00**

- ⇨ The digital output DO would be turn on/off through Byte 19
- ⇨ The value about the analog income AI are from IB0..15.
- ⇨ The value about the analog outcome AO are written about the OB0..15

Complete Example (Type *01)

3x AI X1, X2, X3 (AI + und AI -)

4x AO X5, X6, X7, X8 (AO + und AO -)

10x DI X1, X2, X3, X4, X5, X6, X7, X8 (DI + und DI -)

6x DO X1, X2, X3, X4, X5, X6 (DO + und DO -)

1x “switch mode” X4 (SW + und SW -)

Clamp	X1	X2	X3	X4	X5	X6	X7	X8	Result
Value (2x)	1	2	4	8	16	32	64	128	
Pin 1 (Byte 16)	AI +	AI +	AI +	SW +	AO +	AO +	AO +	AO +	255
Pin 2 - GND	AI -	AI -	AI -	SW -	AO -	AO -	AO -	AO -	-
Pin 3 (Byte 17)	DI +	DI +	DI +	DI +	DI +	DI +	DI +	DI +	255
Pin 4 - GND	DI -	DI -	DI -	DI -	DI -	DI -	DI -	DI -	-
Pin 5 (Byte 18)	DI +	DI +	-	-	-	-	-	-	3
Pin 6 – GND	DI -	DI -	-	-	-	-	-	-	-
Pin 7 (Byte 19)	DO +	DO +	DO +	DO +	DO +	DO +	-	-	63
Pin 8 - GND	DO -	DO -	DO -	DO -	DO -	DO -	-	-	-
Switch (Byte 21)	-	-	-	yes	-	-	-	-	8
DO to AO	-	-	-	-	yes	yes	yes	yes	240
DO to AI	yes	yes	yes	-	-	-	-	-	7

For this example output bytes has to be written into the Bytes 16 to 24.

These values must be transferred each cycle (continuous).

16	17	18	19	20	21	22	23	24
ON/OFF X1-X8 Pin 1	ON/OFF X1-X8 Pin 3	ON/OFF X1-X8 Pin 5	ON/OFF X1-X8 Pin 7	Res	Switch X1-X8 1 - 3	AO to DO X1-X8 Pin 3	DO->AO Type *01 X1-X8 Pin 1	DO->AI Type *01 X1-X8 Pin 1
255	**255**	**3**	**63**	**0**	**8**	**0**	**240**	**7**
0xFF	**0xFF**	**0x03**	**0x3F**	**0x00**	**0x08**	**0x00**	**0xF0**	**0x07**

- ⇨ The digital output DO would be turn on/off through Byte 19
- ⇨ The value about the analog income AI are from IB0..15.
- ⇨ The value about the analog outcome AO are written about the OB0..15

Free use

Clamp	X1	X2	X3	X4	X5	X6	X7	X8	result
Value	1	2	4	8	16	32	64	128	
Pin 1 (Byte 16)									
Pin 2 - GND									
Pin 3 (Byte 17)									
Pin 4 - GND									
Pin 5 (Byte 18)									
Pin 6 – GND									
Pin 7 (Byte 19)									
Pin 8 - GND									
SwitchMode (Byte 21)									
AOtoDO(Byte 22)									
DOtoAO(Byte 23)									
DOtoAI(Byte 24)									

Free use

Clamp	X1	X2	X3	X4	X5	X6	X7	X8	result
Value	1	2	4	8	16	32	64	128	
Pin 1 (Byte 16)									
Pin 2 - GND									
Pin 3 (Byte 17)									
Pin 4 - GND									
Pin 5 (Byte 18)									
Pin 6 – GND									
Pin 7 (Byte 19)									
Pin 8 - GND									
SwitchMode (Byte 21)									
AOtoDO(Byte 22)									
DOtoAO(Byte 23)									
DOtoAI(Byte 24)									

Annex 3 Connection examples Type *00

AI – Analog Input

	2 wire connection	3 wire connection
wiring diagram	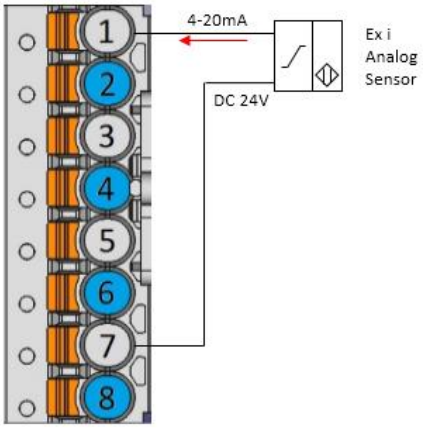	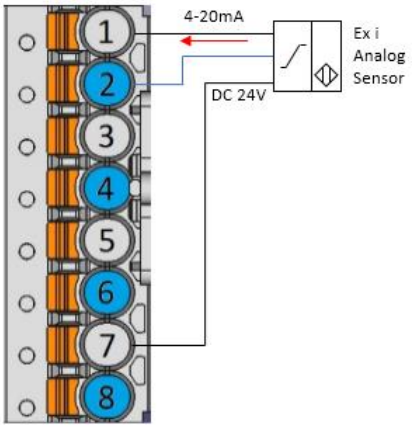
App No.	10	11
Mode	Non	Non
Open load	yes	yes
short circuit	yes	yes

	2 wire connection	3 wire connection
wiring diagram	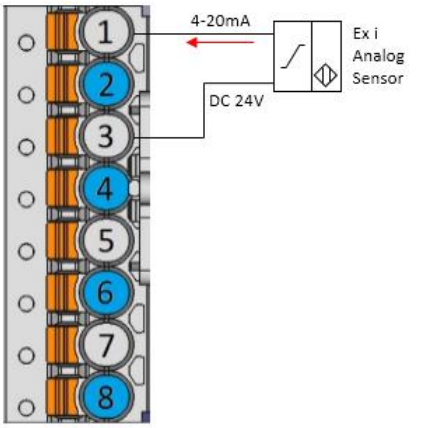	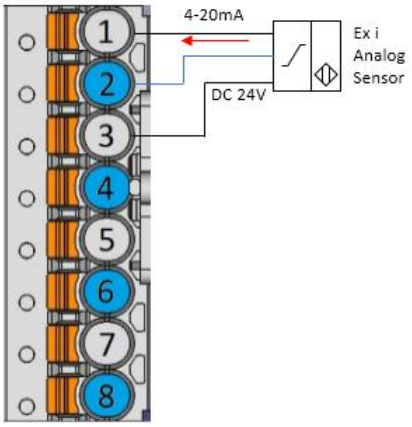
App No.	12	13
Mode	AO to DO	AO to DO
Open load	yes	yes
short circuit	yes	yes

AI - Analog Input (PT100 or TH)

	2 wire connection	3 wire connection
wiring diagram	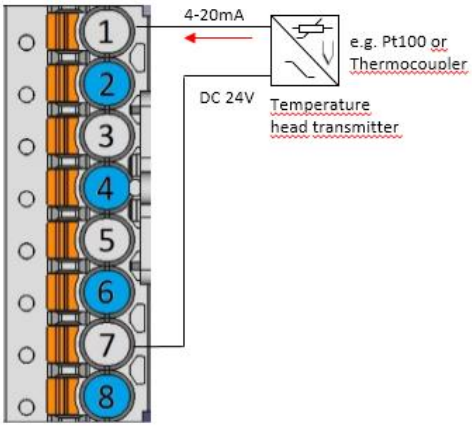	
App No.	14	
Mode	Non	
Open load	yes	
short circuit	yes	
External	Temperature head transmitter	

	2 wire connection	3 wire connection
wiring diagram	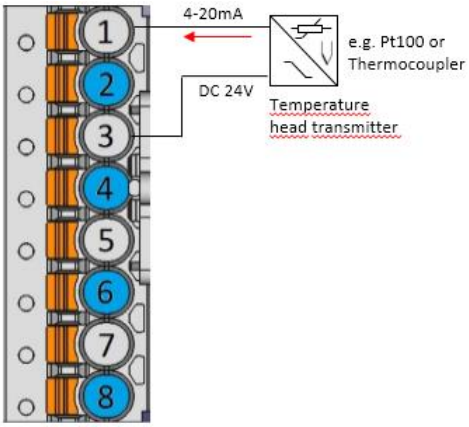	
App No.	15	
Mode	AO to DO	
Open load	yes	
short circuit	yes	
External	Temperature head transmitter	

Special condition, if more voltage is required at the sensor:

	2 Draht Verbindung
wiring diagram	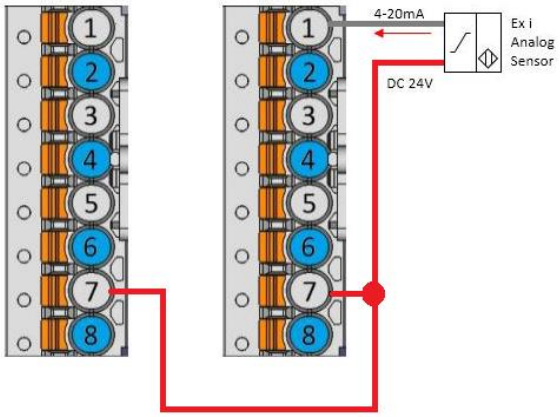
App No.	16
Mode	non
Open load	No
short circuit	no
Caution	**Connection of two DO (PIN 7) channels is only allowed,** **if the return wire leads to the analog input PIN 1.**

AO - Analog Output

	2 wire connection	3 wire connection
wiring diagram	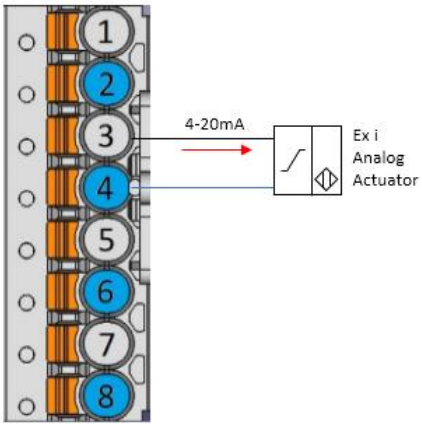	
App No.	30	
Mode	Non	
Open load	yes	
short circuit	no	

DI – Digital Input

	2 wire connection	3 wire connection
wiring diagram	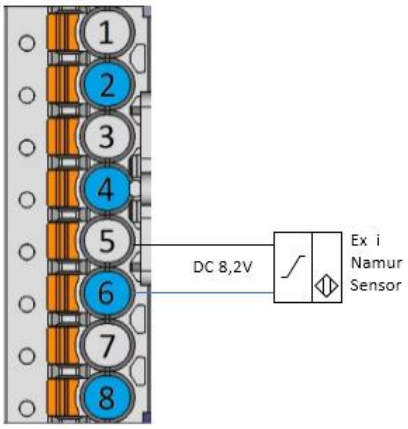	
App No.	50	
Mode	Non	
Open load	yes	
short circuit	yes	

DI – Digital Input (mechanical switch)

	2 wire connection	3 wire connection
wiring diagram	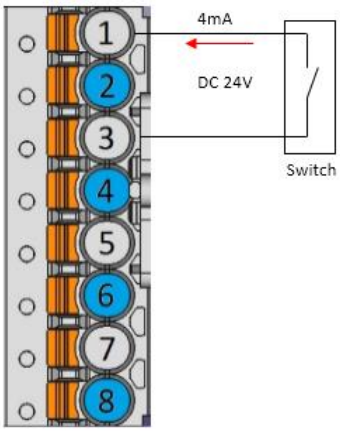	
App No.	51	
Mode	Switch mode	
Open load	no	
short circuit	no	

wiring diagram	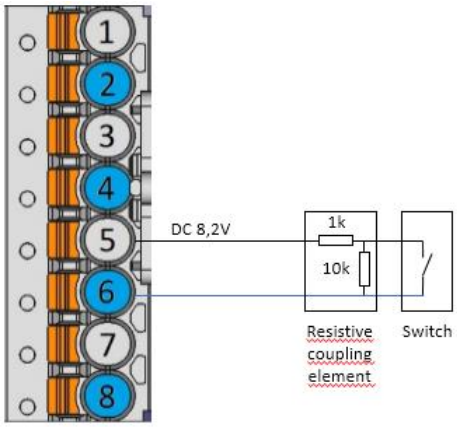	
App No.	52	
Mode	non	
Open load	yes	
short circuit	yes	
External	Resistive coupling element	

DO – Digital Output

	2 wire connection	3 wire connection
wiring diagram	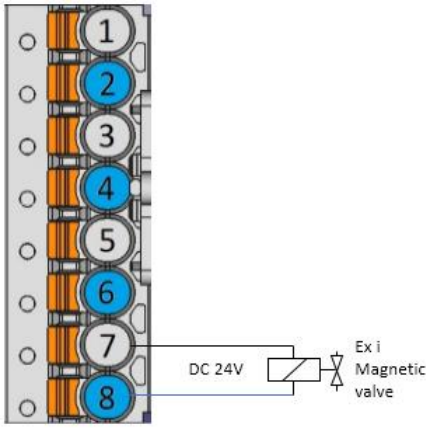	
App No.	70	
Mode	Non	
Open load	yes	
short circuit	yes	

	2 wire connection	3 wire connection
wiring diagram	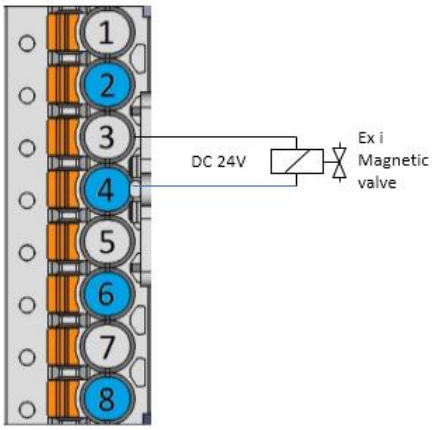	
App No.	71	
Mode	AO to DO	
Open load	yes	
short circuit	no	

Annex 4 Connection examples Type *01

AI – Analog Input

	2 wire connection	3 wire connection
wiring diagram	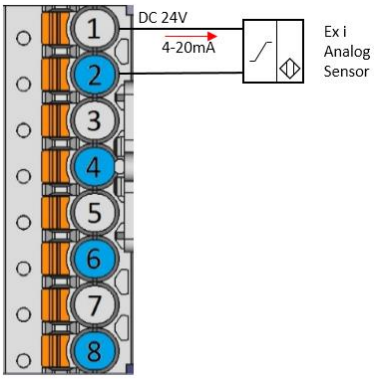	
App No.	110	
Mode	DO to AI	
Open load	yes	
short circuit	yes	

AI - Analog Input (PT100 or TH)

	2 wire connection	3 wire connection
wiring diagram	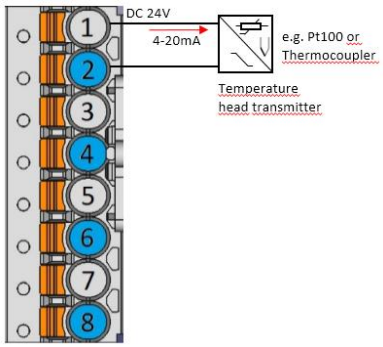	
App No.	114	
Mode	DO to AI	
Open load	yes	
short circuit	yes	
External	Temperature head transmitter	

AO – Analog Output

	2 wire connection	3 wire connection
wiring diagram	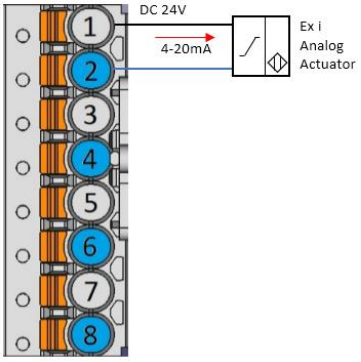	
App No.	130	
Mode	DO to AO	
Open load	yes	
short circuit	no	

DI – Digital Input

	2 wire connection	3 wire connection
wiring diagram	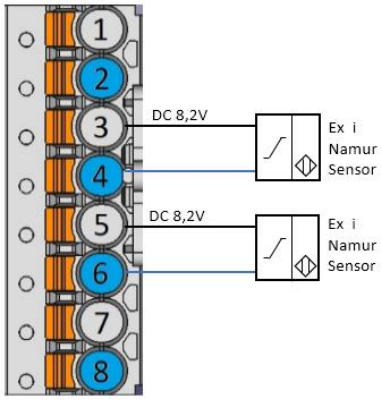	
App No.	150	
Mode	Non	
Open load	yes	
short circuit	yes	

DI – Digital Input (mechanical switch)

	2 wire connection	3 wire connection
wiring diagram	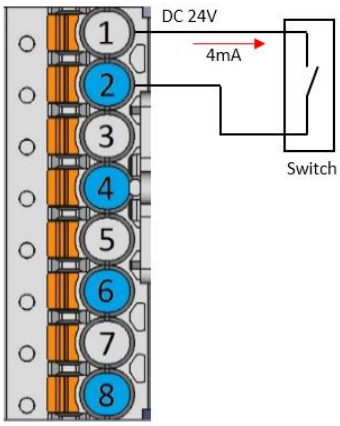	
App No.	151	
Mode	SwitchMode	
Open load	no	
short circuit	no	

wiring diagram	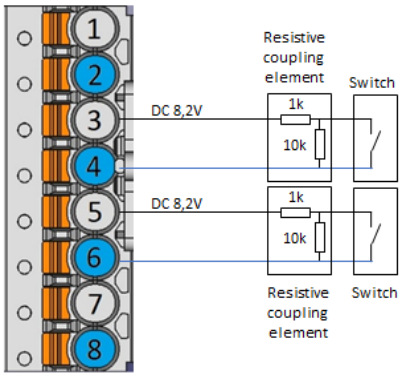	
App No.	152	
Mode	Non	
Open load	yes	
short circuit	yes	
External	Resistive coupling element	

DO – Digital Output

	2 wire connection	3 wire connection
wiring diagram	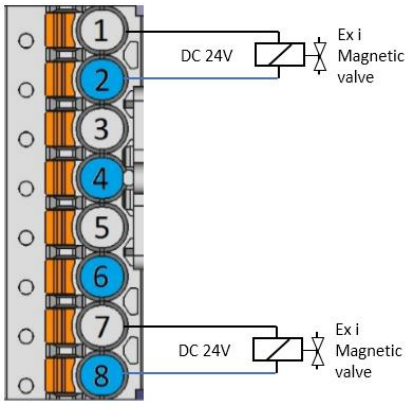	
App No.	170	
Mode	Non	
Open load	yes	
short circuit	yes	

Annex 5 Connection examples Type *02

DI – Digital Input

	2 wire connection	3 wire connection
wiring diagram	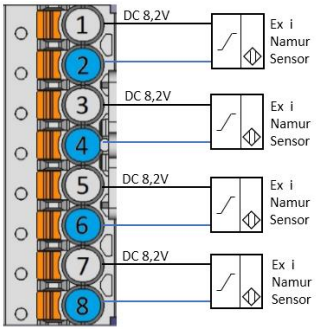	
App No.	250	
Mode	Non	
Open load	yes	
short circuit	yes	

DI – Digital Input (mechanical switch)

wiring diagram	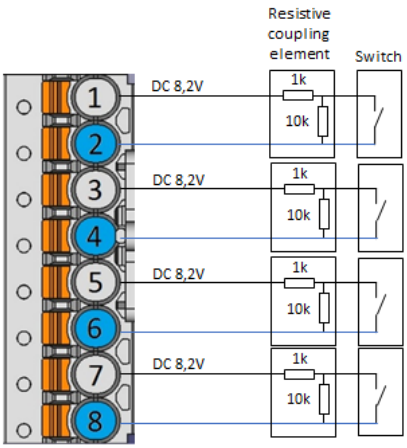	
App No	252	
Mode	Non	
Open load	yes	
short circuit	yes	
External	Resistive coupling element	

Development, production and sales

High flexibility for your application

Customized modifications

Product individualization